This is a digital copy of a book that was preserved for generations on library shelves before it was carefully scanned by Google as part of a project to make the world's books discoverable online.

It has survived long enough for the copyright to expire and the book to enter the public domain. A public domain book is one that was never subject to copyright or whose legal copyright term has expired. Whether a book is in the public domain may vary country to country. Public domain books are our gateways to the past, representing a wealth of history, culture and knowledge that's often difficult to discover.

Marks, notations and other marginalia present in the original volume will appear in this file - a reminder of this book's long journey from the publisher to a library and finally to you.

Usage guidelines

Google is proud to partner with libraries to digitize public domain materials and make them widely accessible. Public domain books belong to the public and we are merely their custodians. Nevertheless, this work is expensive, so in order to keep providing this resource, we have taken steps to prevent abuse by commercial parties, including placing technical restrictions on automated querying.

We also ask that you:

+ *Make non-commercial use of the files* We designed Google Book Search for use by individuals, and we request that you use these files for personal, non-commercial purposes.

+ *Refrain from automated querying* Do not send automated queries of any sort to Google's system: If you are conducting research on machine translation, optical character recognition or other areas where access to a large amount of text is helpful, please contact us. We encourage the use of public domain materials for these purposes and may be able to help.

+ *Maintain attribution* The Google "watermark" you see on each file is essential for informing people about this project and helping them find additional materials through Google Book Search. Please do not remove it.

+ *Keep it legal* Whatever your use, remember that you are responsible for ensuring that what you are doing is legal. Do not assume that just because we believe a book is in the public domain for users in the United States, that the work is also in the public domain for users in other countries. Whether a book is still in copyright varies from country to country, and we can't offer guidance on whether any specific use of any specific book is allowed. Please do not assume that a book's appearance in Google Book Search means it can be used in any manner anywhere in the world. Copyright infringement liability can be quite severe.

About Google Book Search

Google's mission is to organize the world's information and to make it universally accessible and useful. Google Book Search helps readers discover the world's books while helping authors and publishers reach new audiences. You can search through the full text of this book on the web at http://books.google.com/

WIDENER LIBRARY
HX GZUU W

461
8 vols
net 24/- ea

Qci 1490.165

Harvard University

LIBRARY OF THE

DIVISION OF

ENGINEERING.

MAR 9 1911

SCIENCE CENTER LIBRARY

HARVARD COLLEGE
LIBRARY

Yours truly
W. Foulis

TRANSACTIONS

OF THE

Institution of Engineers and Shipbuilders

IN SCOTLAND

(INCORPORATED).

VOLUME XLVI.

FORTY-SIXTH SESSION, 1902-1903.

EDITED BY THE SECRETARY.

GLASGOW:

PUBLISHED BY THE INSTITUTION AT
207 BATH STREET.

1903.

Sci 1490.155

Feb. 8, 1911
HARVARD UNIVERSITY
DEPARTMENT OF ENGINEERING.
(46 – 53)

JUN 20 1917
TRANSFERRED TO
HARVARD COLLEGE LIBRARY

PRINTED FOR THE INSTITUTION BY
WILLIAM ASHER, PRINTER AND PUBLISHER,
128 RENFIELD STREET, GLASGOW.

OFFICE-BEARERS.

FORTY-SIXTH SESSION, 1902-1903.

President.

WILLIAM FOULIS.

Vice-Presidents.

PROF. J. H. BILES, LL.D.
ARCHIBALD DENNY,
JAMES GILCHRIST.
THOMAS KENNEDY.
JAMES MOLLISON.
JAMES WEIR.

Councillors
Members.

WILLIAM M. ALSTON.
PROF. ARCHIBALD BARR, D.Sc.
H. W. BROCK.
E. HALL-BROWN.
WILLIAM BROWN.
W. A. CHAMEN.
ALEXANDER GRACIE.
GEORGE McFARLANE.
WILLIAM MELVILLE.
MATTHEW PAUL.
F. J. ROWAN.
A. W. SAMPSON.
JOHN STEVEN.
JOHN WARD.
A. D. WEDGWOOD.

Associates.

JAMES NAPIER. GEORGE STRACHAN.
J. D. YOUNG.

Finance Committee.

THOMAS KENNEDY, *Convener.*
PROF. J. H. BILES, LL.D.
ALEXANDER GRACIE.
JAMES MOLLISON.
F. J. ROWAN.
GEORGE STRACHAN.
JAMES WEIR.

Library Committee.

WILLIAM BROWN, *Convener.*
WILLIAM M. ALSTON.
PROF. A. BARR, D.Sc.
W. A. CHAMEN.
E. HALL-BROWN.
WILLIAM MELVILLE.
JOHN STEVEN.
JOHN WARD.

House Committee.

From Institution.
WILLIAM FOULIS.
ARCHIBALD DENNY.
JAMES GILCHRIST.
GEORGE McFARLANE.
A. W. SAMPSON.
EDWARD H. PARKER, *Secretary.*

From Philosophical Society.
PROF. ARCH. BARR, D.Sc., *Convener*
PROF. PETER BENNETT.
J. F. CAMPBELL.
JOHN ROBERTSON.
JOHN MANN, *Treasurer.*

Committee on Papers.

PROF. J. H. BILES, LL.D., *Convener.*
WILLIAM M. ALSTON.
W. A. CHAMEN.
ARCHIBALD DENNY.
ALEXANDER GRACIE.
E. HALL-BROWN.
WILLIAM MELVILLE.
A. D. WEDGWOOD.

Honorary Councillors—Past Presidents.

JAMES M. GALE. HAZELTON R. ROBSON. JOHN INGLIS, LL.D.
SIR WILLIAM ARROL, LL.D., M.P. GEORGE RUSSELL. ROBERT CAIRD, LL.D., F.R.S.E.

Representatives on the Board of Trade Consultative Committee.

JAMES DENNY. JOHN DUNCAN. JAMES HAMILTON. JAMES WEIR.

Representatives on Lloyd's Technical Committee.

SINCLAIR COUPER. JOHN INGLIS, LL.D.
RICHARD RAMAGE. JAMES ROWAN.

Representative on the Board of Governors of the Glasgow School of Art.

JAMES MOLLISON.

Representative on the Board of Governors of the Glasgow and West of Scotland Technical College. JAMES WEIR.

Honorary Treasurer—THOMAS KENNEDY, Messrs. Glenfield & Kennedy, Ltd., Kilmarnock.

Secretary and Editor of Transactions—EDWARD H. PARKER,
Institution Rooms, 207 Bath Street.

Curator and Sub-Librarian—FRANCIS MARTIN, Institution Rooms, 207 Bath Street.

PRESIDENTS OF THE INSTITUTION

Since Foundation in 1857.

1857-59 WILLIAM JOHN MACQUORN RANKINE, C.E., LL.D., F.R.SS.L. & E., Professor of Civil Engineering and Mechanics, Glasgow University.

1859-61 WALTER MONTGOMERIE NEILSON, Hyde Park Locomotive Works, Glasgow.

1861-63 WILLIAM JOHNSTONE, C.E., Resident Engineer, Glasgow & South-Western Railway, Glasgow.

1863-65 JAMES ROBERT NAPIER, Engineer and Shipbuilder, Glasgow.

1865-67 JAMES GRAY LAWRIE, Engineer and Shipbuilder, Glasgow.

1867-69 JAMES MORRIS GALE, C.E., Engineer, Glasgow Corporation Water Works.

1869-70 WILLIAM JOHN MACQUORN RANKINE, C.E., LL.D., F.R.SS.L. & E., Professor of Civil Engineering and Mechanics, Glasgow University.

1870-72 DAVID ROWAN, Marine Engineer, Glasgow.

1872-74 ROBERT DUNCAN, Shipbuilder, Port-Glasgow.

1874-76 HAZELTON ROBSON ROBSON, Marine Engineer, Glasgow.

1876-78 ROBERT BRUCE BELL, Civil Engineer, Glasgow.

1878-80 ROBERT MANSEL, Shipbuilder, Glasgow.

1880-82 JOHN LENNOX KINCAID JAMIESON, Marine Engineer, Glasgow.

1882-84 JAMES REID, Hyde Park Locomotive Works, Glasgow.

1884-86 JAMES THOMSON, LL.D., F.R.S., Professor of Civil Engineering and Mechanics, Glasgow University.

1886-87 WILLIAM DENNY, Shipbuilder, Dumbarton.

1887-89 ALEXANDER CARNEGIE KIRK, LL.D., Marine Engineer, Glasgow.

1889-91 EBENEZER KEMP, Marine Engineer, Glasgow.

1891-93 ROBERT DUNDAS, C.E., Resident Engineer, Southern Division, Caledonian Railway, Glasgow.

1893-95 JOHN INGLIS, LL.D., Engineer and Shipbuilder, Glasgow.

1895-97 Sir WILLIAM ARROL, LL.D., M.P., Engineer and Bridge Builder, Glasgow.

1897-99 GEORGE RUSSELL, Mechanical Engineer, Motherwell.

1899-01 ROBERT CAIRD, LL.D., F.R.S.E., Shipbuilder, Greenock.

1901-03 WILLIAM FOULIS, Engineer, Glasgow Corporation Gas Works.

Elected
28th April, 1902 ARCHIBALD DENNY, Shipbuilder, Dumbarton.

CONTENTS.

	PAGE
Office-Bearers, ...	iii
Presidents of the Institution, ...	iv
Memorandum and Articles of Association, ...	ix
Address by the President, ...	1

PAPERS READ.

Steam Turbines: With Special reference to the de Laval Type of Turbine—by Mr Konrad Andersson, ...	8
Some Points in connection with the Riveted Attachments in Ships —by Mr J. Bruhn, D.Sc., ...	58
Circulation in Shell Boilers—by Mr William Thomson, ...	131
The Dynamic Balance of the Connecting-Rod—by Mr C. A. Matthey,	176
Notes Relating to the de Laval Steam Turbine, the Wiredrawing Calorimeter, and the Superheating of Steam by Wiredrawing—by Professor W. H. Watkinson, ...	194
Speed Control of Electric Motors when Driven from Constant-Pressure Mains—by Mr W. B. Sayers, ...	216
Tools and Gauges in the Modern Shop—by Mr H. F. L. Orcutt, ...	248
Experimental and Analytical Results of a Series of Tests with a Pelton Wheel—by Mr Wm. Campbell Houston, B.Sc., ...	275
The Old Quay Walls of Glasgow Harbour—by Mr W. M. Alston, ...	305

Copy of Original Contract for Cunard Steamers, ...	328
"James Watt" Anniversary Dinner, ...	333
Minutes of Proceedings, ...	343
Report of the Council, ...	361
Treasurer's Statement, ...	368
Report of the Library Committee, ...	373
New Books Added to Library, ...	375
Obituary, ...	383
List of Members, ...	402
Index, ...	453

PLATES.

Steam Turbines: With Special Reference to the de Laval Type of Turbine. ... ... I., II.

Some Points in Connection with the Riveted Attachments in Ships, III., IV., V.

Circulation in Shell Boilers, ... VI.

The Dynamic Balance of the Connecting-Rod, ... VII.

Notes Relating to the de Laval Steam Turbine, the Wiredrawing Calorimeter, and the Superheating of Steam by Wiredrawing, VIII., IX.

Tools and Gauges in the Modern Shop, ... X., XI., XII.

The Old Quay Walls of Glasgow Harbour, XIII., XIV., XV., XVI., XVII., XVIII., XIX., XX.

Experimental and Analytical Results of a Series of Tests with a Pelton Wheel, XXI., XXII.

PREMIUMS AWARDED

FOR

PAPERS READ DURING SESSION 1901-1902.

PREMIUM OF BOOKS.

1. A Premium of Books to Mr WILLIAM BROWN, for his paper on "Dredging and Modern Dredge Plant."

2. A Premium of Books to Mr A. MARSHALL DOWNIE, B.Sc., for his paper on "The Design and Construction of Fly-Wheels for Slow-Speed Engines for Electric Lighting and Traction Purposes."

3. A Premium of Books to Mr J. FOSTER KING, for his paper on "Rudders."

ADVERTISEMENT.

The responsibility of the statements and opinions given in the following Papers and Discussions rests with the individual authors; the Institution, as a body, merely places them on record.

MEMORANDUM OF ASSOCIATION

OF THE

INSTITUTION OF ENGINEERS AND SHIPBUILDERS IN SCOTLAND.

---

1. The Name of the Association is "THE INSTITUTION OF ENGINEERS AND SHIPBUILDERS IN SCOTLAND."

2. The Registered Office of the Association will be situate in Scotland.

3. The Objects for which the Association is established are :—

(1.) The Incorporation of the present Institution of Engineers and Shipbuilders in Scotland, under the 30th and 31st Victoria, cap. cxxxi., and

(2.) To facilitate the exchange of information and ideas amongst its Members, to place on record the results of experience elicited in discussion, and to promote the advancement of science and practice in Engineering and Shipbuilding.

(3.) The doing all such other lawful things as are incidental or conducive to the attainments of the above objects.

4. The Income and Property of the Association, whencesoever derived, shall be applied solely towards the promotion of the objects of the Association as set forth in this Memorandum of Association, and no portion thereof shall be paid or transferred directly or indirectly by way of dividend, bonus, or otherwise howsoever, by way of profit, to the persons who at any time are or have been Members of the Association, or to any of them, or to any person claiming through any of them.

Provided that nothing herein shall prevent the payment in good faith of remuneration to any Officers or Servants of the Association, or to any Member of the Association, or other person, in return for any services rendered to the Association.

5. The fourth paragraph of this Memorandum is a condition on which a Licence is granted by the Board of Trade to the Association, in pursuance of Section 23 of the "Companies Act, 1867." For the purpose of preventing any evasion of the terms of the said fourth paragraph, the Board of Trade may from time to time, on the application of any Member of the Association, impose further conditions, which may be duly observed by the Association.

6. If the Association acts in contravention of the fourth paragraph of this Memorandum, or of any such further Conditions, the liability of every Member of the Council of the Association, and also of every Member who has received any such dividend, bonus, or other profit as aforesaid, shall be unlimited.

7. Every Member of the Association undertakes to contribute to the Assets of the Association—in the event of the same being wound up during the time that he is a Member, or within one year afterwards, for payment of the Debts and Liabilities of the Association, contracted before the time at which he ceases to be a Member, and of the Costs, Charges, and Expenses of winding up the same, and for the adjustment of the rights of the Contributaries among themselves—such amount as may be required, not exceeding Ten Pounds, or, in case of his liability becoming unlimited, such other amount as may be required in pursuance of the last preceding paragraph of this Memorandum.

WE, the several persons whose names and addresses are subscribed, are desirous of being formed into an Association in pursuance of this Memorandum of Association :—

Names, Addresses, and Description of Subscribers—

DAVID ROWAN, 217 Elliot Street, Glasgow, Engineer.
W. J. MACQUORN RANKINE, C.E., LL.D., &c., 59 St. Vincent St., Glasgow.
M. R. COSTELLOE, 26 Granville Street, Glasgow, Measuring Surveyor.
BENJAMIN CONNER, 17 Scott Street, Garnethill, Engineer.
JAMES DEAS, 16 Robertson Street, Glasgow, Civil Engineer.
JAMES M. GALE, 23 Miller Street, Glasgow, Civil Engineer.
W. MONTGOMERIE NEILSON, C.E., Hyde Park Locomotive Works, Glasgow.

Dated the Twelfth day of July, Eighteen Hundred and Seventy-One.

ROBERT ROSS, of Glasgow, Solicitor, Witness to the above signatures.

NOTE.—By Special Resolution passed on 2nd October, 1902, and confirmed on 20th October, 1902, the Articles of Association dated 12th July, 1871, as modified and altered in 1873 and 1880, were annulled, and the following Articles of Association were substituted.

The following Articles were registered with the Registrar of Joint Stock Companies on 28th October, 1902.

ARTICLES OF ASSOCIATION

OF THE

INSTITUTION OF ENGINEERS AND SHIPBUILDERS IN SCOTLAND.

SECTION I.—PRELIMINARY.

1. For the purpose of registration, the number of Members of the Institution is declared unlimited.

2. These Articles shall be construed with reference to the provisions of the Companies Acts, 1862 to 1900; and terms used in these Articles shall be taken as having the same respective meanings as they have when used in those Acts.

3. The Objects of the Institution are those set forth in the Memorandum of Association. Objects of the Institution.

SECTION II.—CONSTITUTION.

4. The Institution shall consist of Members, Associate Members, Associates, Students, and Honorary Members. Constitution.

5. Candidates for admission as Members shall be persons not under 25 years of age, who have been educated as Engineers or Shipbuilders and have occupied a responsible position in connection with the Practice or Science of Engineering or Shipbuilding. Who may be Members.

6. Candidates for admission as Associate Members shall be persons not under 22 years of age, who have Who may be Associate Members.

been educated as Engineers or Shipbuilders and are engaged in the Practice or Science of Engineering or Shipbuilding.

Who may be Associates.

7. Candidates for admission as Associates shall be such persons, not included in the classes enumerated in the two preceding Articles, who, not being under 25 years of age, are considered by the Council eligible on account of their scientific attainments, or are considered by the Council qualified by knowledge bearing on Engineering Science or Practice.

Who may be Students.

8. Candidates for admission as Students shall be persons not under 18 years of age who are engaged in study or employment with a view to qualifying themselves as Engineers or Shipbuilders. Before attaining the age of 25 years they must apply for election as Members or Associate Members if they desire to remain connected with the Institution. They may not continue to be Students after attaining the age of 25 years.

Who may be Hon. Members.

9. Honorary Members shall be such distinguished persons as the Council shall recommend and the Institution shall appoint. The number of Honorary Members shall not exceed Twelve.

Members, etc., under former Articles of Association.

10. All persons whose names shall on 30th April, 1902, be on the Roll of the Institution under the former Articles of Association as Members, Associates, or Honorary Members, and whose Subscriptions are not more than two years in arrear at that date, shall become Members, Associates and Honorary Members respectively within the meaning of these Articles, and that without procedure of any kind on the part of such persons.

Graduates under former Articles of Association.

11. All persons whose names shall on 30th April, 1902, be on the Roll of the Institution under the former Articles of Association as Graduates, and whose Subscriptions are not more than two years in arrear at that date, shall be considered and treated as Students within the meaning of these Articles, and shall have the privileges, and be subject to the regulations affecting Students;

and, notwithstanding the terms of Article 8 hereof, such Graduates as are over 25 years of age shall be allowed to remain as Students for one year from and after 30th April, 1902, but no longer.

Abbreviated Titles of Members, etc.

12. The abbreviated distinctive titles for indicating the connection with the Institution shall be the following, viz.—For Members, M.I.E.S.; for Associate Members. A.M.I.E S.; for Associates, A.I.E.S.; for Students, S.I.E.S.; and for Honorary Members, HON. M.I.E.S.

Candidates, how recommended and elected.

13. Every Candidate for admission as a Member, Associate Member, Associate or Student of the Institution, shall obtain the recommendation of at least three Members, such recommendation and the relative undertaking by the candidate being according to Form A contained in the Appendix. Such recommendation and undertaking shall be lodged with the Secretary, and the Council shall consider the same at their first Meeting thereafter, and if they approve the recommendation shall be mentioned in the notice calling the next general meeting of the Institution; and then, unless a ballot be demanded by at least five persons entitled to vote, the Candidate shall be declared elected. If a ballot be taken he shall be admitted if three-fifths of the votes are favourable; Members only being entitled to vote. The proposal for transferring any person from the Class of Students to the Classes of Associate Members or Members, or from the Class of Associate Members to the Class of Members, shall be according to Form B contained in the Appendix, and this form shall be subscribed by at least three Members and delivered to the Secretary for the consideration of the Council who shall, if they think fit, make the proposed transfer.

Honorary Members, how elected.

14. The granting of Honorary Membership to any person may be proposed at any Council meeting, and, if the Council, after consideration at their next meeting, approve of the proposal, intimation thereof shall be given by the Secretary in the circular calling the next general meeting of the Institution. At that

meeting unless a ballot be demanded by at least five persons entitled to vote, the person proposed shall be declared elected. If a ballot be taken then the person proposed shall be admitted if four-fifths of the votes are favourable; Members only being entitled to vote.

Members, &c. formally admitted.

15. Every person duly elected or admitted as a Member, Associate Member, Associate, Student, or Honorary Member, shall be notified in writing of his election or admission by the Secretary. At the first meeting of the Institution held thereafter at which he is present, he shall be introduced according to the ensuing form, viz. —The President or the Chairman of the Meeting, addressing him by name, shall say: "As President (or Chairman of this meeting) of the Institution of Engineers and Shipbuilders in Scotland, I introduce you as a Member (or Associate Member or Associate or Student or Honorary Member as the case may be). Thereafter the new Member, Associate Member, Associate, Student or Honorary Member shall sign the Roll of Members, etc., to be kept by the Secretary, and on making payment of any fees or subscriptions due he shall be entitled to receive a diploma. The diploma shall be signed by the President and the Secretary.

Diploma.

Rejected candidates not to be noticed in minutes—wish of Honorary Members to be obtained before being balloted for.

16. If any person proposed for admission into the Institution be not approved by the Council, or be rejected on being balloted for, no notice shall be taken of the proposal in the Minutes of the General Meetings, and such person shall not be proposed again for admission until after the expiry of one year from the date of such disapproval or rejection. Before the meeting of Council for considering any proposal to grant Honorary Membership it shall be ascertained from any person proposed to be made an Honorary Member, whether he will accept the honour, no notice being taken of the proposal in the Minutes unless he is elected.

Section III.—MANAGEMENT AND OFFICE-BEARERS.

Council, Management by.

17. The Direction and Management of the affairs of the Institution shall be confided to a Council, which shall consist of a President, six Vice-Presidents, and eighteen Councillors. Of the eighteen Councillors, not more than three may be Associates, the remainder being Members. Five Members of Council shall constitute a Quorum.

Constitution of Council—Five a Quorum.

Who may be President.

18. Members only shall be eligible for election as President. The President shall preside over all meetings of the Institution and Council at which he is present, and shall regulate and keep order in the proceedings. The President shall hold office for one year only, but shall be eligible for re-election at the expiry of the year.

Who may be Vice-Presidents.

19. Members only shall be eligible for election as Vice-Presidents. In the absence of the President, the Vice-Presidents in rotation shall preside at meetings of the Council and Institution. The Vice-Presidents shall hold office for three years.

Chairman to have casting vote.

20. In case of the absence of the President and all the Vice-Presidents, the meeting may elect any one of the Council, or any Member, to preside. In all cases the Chairman of any meeting shall have a Deliberative Vote and a Casting Vote.

Who may be Councillors.

21. Members and Associates only shall be eligible for election as Ordinary Members of Council, and shall hold office for three years, and not more than three Associates shall hold office in the Council at any one time.

22. Past Presidents of the Institution shall be *ex officio* Honorary Members of Council.

First Council.

23. The Office-Bearers in office at 30th April, 1902, shall continue in office till the First General Meeting of the Institution in October, 1902, when a new Council shall be elected in terms of these Articles. Such Office-

Bearers shall be eligible for election for the new Council.

Retiral of Members of Council.

Of the new Council, two Vice-Presidents shall retire in October of each of the years, 1903, 1904, and 1905, their places being filled by election, and the persons elected shall hold office until the expiry of the terms of office. Similarly of the new Council, six Councillors (being five Members and one Associate) shall retire in October, 1903, and a like number in October, 1904, and the remainder in October, 1905, their places being filled by election at these dates respectively, and their successors retiring at the expiry of the terms of office, and so on thereafter from year to year. The Vice-Presidents to retire in October, 1903, and 1904, shall be determined by lot among the six Vice-Presidents first elected, and the Members of Council to retire in October, 1903 and 1904 shall be determined by lot among the Members of the Council first elected. The Vice-Presidents and the Ordinary Members of Council who fall to retire at the dates mentioned, or who fall to retire at any time on the expiry of their term of office, shall not be eligible for re-election in the same capacity until one year has elapsed from the date of retiral.

Office-Bearers to be elected by ballot.

24. The Members of Council shall be elected by ballot at the Annual General Meeting, such meeting being the last Ordinary Meeting held in each month of April, but the new Office-Bearers elected at this meeting shall not enter office until 1st October following. In the election of President, Vice-Presidents, and Ordinary Members of Council from the Class of Associates, all Members, Associate Members, and Associates shall be entitled to vote. In the election of the other Members of Council only Members and Associate Members shall be entitled to vote.

Lists for Election.

25. In March of each year the Council shall meet and prepare a list of names for the election of Council for the ensuing year. This list shall contain the name of the proposed President, and not less than two names of persons proposed by the Council for each

vacancy in the class of Vice-Presidents, Ordinary Members, and Associate Members of Council. This list shall be submitted to the Members at the Monthly Meeting preceding the Annual Meeting, and the Members present may by motion, duly seconded, propose any additional names for any of the offices.

Ballot Lists to be sent to Members.

26. Fourteen days before the General Meeting in April of each year the list as proposed by the Council for the election of Members and others to fill the vacancies in the Council for the ensuing year, with such additions as may have been made thereto under Article 25, shall be printed and sent to all Members, and Associate Members, and the list shall serve as a ballot paper. A similar list shall be printed and sent to all Associates containing the names of those for whom they are entitled to vote, Those persons entitled to vote may vote for as many names on the list as there are vacancies to be filled. In the event of any ballot paper not containing names equal to the number of vacancies to be filled such ballot paper shall be treated as a spoiled paper.

The ballot papers may be sent by post or otherwise to the Secretary so as to reach him before the day and hour named for the Annual General Meeting, or they may be presented personally by those entitled to vote, at the opening of the Meeting.

Vacancies occurring during the Session to be filled up by the Council.

27. A vacancy occurring during any Session in consequence of the resignation or death of any Office-Bearer (except the President) shall be filled up by the Council, until the next Annual General Meeting for electing Office-Bearers. Any vacancy in the office of President shall be filled up at the next General Meeting of the Institution. A person elected to fill a vacancy shall hold office for the period unexpired of the term of office of the Office-Bearer resigning or dying or being removed from office, and he shall be eligible for re-election.

SECTION IV.—POWERS AND DUTIES OF COUNCIL.

Meetings of Council.

28. The Council shall meet as often as the business of the Institution requires, and during each Session—that is from October till April—the Council shall meet at least once a month.

Committees.

29. The Council may delegate any of their powers to Committees consisting of such Members of the Council as they think fit, and they may appoint Committees to report to them upon special subjects. In particular, they shall appoint a Finance Committee to superintend the finances of the Institution, a Library Committee to superintend Library arrangements, and a Papers Committee to arrange for papers being submitted at meetings of the Institution. The Minutes of all Committees shall not take effect until approved by the Council. The President shall be *ex officio* a member of all Committees.

Honorary Treasurer

The Convener of the Finance Committee shall be styled Honorary Treasurer. He shall be elected by the Council from their number, and notwithstanding the provision for retiral in Article 23, he shall be entitled to retain the office of Honorary Treasurer for three years from the date of his appointment.

Bye-Laws, etc.

30. The Council may make Bye-Laws and Regulations for carrying on the business of the Institution, and from time to time, alter, amend, repeal, vary, or add to the same; but any Bye-Law or Regulation, or any alteration or amendment thereon, or addition thereto, shall only come into force after the same has been confirmed at a General Meeting of the Institution, and no Bye-Law or Regulation shall be made under the foregoing which would amount to such an addition to or alteration of these Articles as would only be legally made by a Special Resolution passed and confirmed in accordance with Sections 50 and 51 of the Companies Act, 1862. The Council shall

Investments.

be entitled to invest the Funds of the Institution as they think fit, on such security, heritable or moveable, as to

them shall seem proper, and may alter or vary the investments from time to time. The Council may purchase or sell property, heritable or moveable, for the use of the Institution, and may borrow money on the security of the property of the Institution, subject to confirmation by the Institution at an Extraordinary Meeting called for the purpose.

Council may purchase or sell.

Borrowing.

31. The Council shall appoint a Secretary and a Treasurer, and any other official or servant required to carry on the work of the Institution, and the appointments made by the Council shall be on such terms and conditions as the Council may think fit.

Officials to be appointed.

32. All questions in or before the Council shall be decided by vote, and such vote shall be taken by a show of hands or by ballot; but at the desire of any four Members present the determination of any subject shall be postponed till the next meeting of Council.

Votes at Council Meetings.

Section V.—SECRETARY AND TREASURER.

33. Subject to regulation by the Council, the Secretary (who may also act as Treasurer) shall conduct the correspondence of the Institution; attend all Meetings of the Institution, of the Council, and of Committees; take Minutes of the proceedings of such Meetings, and enter them in the proper books provided for the purpose; read at all Meetings of the Institution and Council respectively the Minute of the preceding Meeting, and all communications received by him or ordered to be read; superintend the publication of such papers as the Council may direct; take charge of the Library; issue notices of Meetings; issue Diplomas; keep the Roll and Registers; and perform whatever other duties are indicated in the Regulations of the Institution as appertaining to his department or set forth in the terms of his appointment.

Duties of Secretary.

34. Subject to regulation by the Council, the duties of the Treasurer shall be to take charge of the property

Duties of Treasurer

of the Institution (excepting books, papers, drawings, models, and specimens of materials, which shall be in the charge of the Secretary); to receive all payments and subscriptions due to the Institution; to direct the collection of subscriptions; to pay into one of the Glasgow Banks, in the joint names of the President, Honorary Treasurer, and himself, the cash in his hands whenever it shall amount to Ten Pounds; to pay all sums due by the Institution, but not without an order signed by two Members of the Finance Committee, and to keep an account of all his intromissions in the General Cash Book of the Institution, which shall upon all occasions be open to inspection of the Finance Committee, and which shall be balanced annually, as at 30th September. The Treasurer shall prepare an Annual Statement of the Funds of the Institution, and of the receipts and payments of each financial year, which shall be audited by the Auditor aftermentioned, and this Statement of the Funds and an Inventory of all the property possessed by the Institution, and a List of the Members, Associate Members, Associates, and Students, whose subscriptions are in arrear, shall be submitted to the First Meeting of the Council, in October.

Annual Report.

35. An Annual report upon the affairs of the Institution shall be drawn up under the direction of the Council at a meeting to be held not less than ten days before the General Meeting of the Institution in October. This report shall embody reports from the representatives elected by the Council to various official bodies.

Section VI.—AUDIT OF ACCOUNTS.

Auditor and duties.

36. An Auditor, who must be a Chartered Accountant of at least five years standing, shall be appointed by the Council at their meeting preceding the last General Meeting of each Session, to examine the accounts and books of the Treasurer, and the Annual Financial Statement or Statements of the Funds, and that State-

ment along with the Audit and Annual Report, shall be printed in the notice calling the First General Meeting of the Institution in October, and shall be read at that meeting.

SECTION VII—MEETINGS AND PROCEEDINGS OF THE INSTITUTION.

Ordinary General Meetings every four weeks during the Session.

37. The Institution shall hold ordinary meetings for reading papers, and for discussing matters connected with the objects of the Institution; and such meetings shall take place regularly, at least once in every four weeks during each Session; and may be adjourned from time to time. The Sessions shall commence in October, and continue until the month of April next following, inclusive. No business shall be transacted at any Meeting, unless 25 Members shall be present.

At the General Meeting in April of each year for the election of Office-Bearers, the order of business shall be:—

(1) Minutes of last meeting.

(2) To read and consider the reports of the Council and Treasurer.

(3) The meeting shall nominate two Scrutineers, who shall be members, and shall hand to them the ballot-box containing the voting papers for the new Office-Bearers.

(4) The Scrutineers shall receive all ballot papers which may have reached the Secretary, and all others which may be presented at the Meeting. The Scrutineers shall then retire and verify the lists and count the votes, and shall, before the close of the meeting, report to the Chairman the names which have obtained the greatest number of votes subject to the conditions of the ballot. The Chairman shall then read the list presented by the Scrutineers, and shall declare the gentlemen named in the list to be duly elected, provided always that the list does

not contain more names than there are vacancies to be filled.

Ordinary Meetings—order of business.

38. At every ordinary meeting of the Institution, the Secretary shall first read the minutes of the preceding meeting, which, on approval, shall then be signed by the Chairman of the meeting at which the minutes are read and approved. The Secretary shall next read any notices which may have to be brought before the meeting; after which any Candidates for admission may, if necessary, be balloted for, and any new Members shall be admitted. Any business of the Institution shall then be disposed of, after which notices of motion may be given. The paper or papers for the evening shall then be read and discussed. Each Member shall have the privilege of introducing one friend to the General Meetings, whose name must be written in the Visitors' Book together with that of the Member introducing him; but if the introducing Member be unable to attend the Meeting he may send with the visitor a card signed by him addressed to the Secretary. During such portions of any of these Meetings as may be devoted to any business connected with the management of the Institution, visitors may be requested by the Chairman to withdraw.

Nature of papers to be read.

39. All papers read at the meetings of the Institution must be connected with the Science or Practice of Engineering or Shipbuilding, and must be accepted by the Papers' Committee before being read.

Proceedings to be published.

40. The papers read, and the discussions held during each Session, or such portion of them as the Council shall select, shall be printed and published forthwith.

Explanatory notes after reading of papers may be published.

41. Explanatory notes communicated after the reading or discussing of papers may be printed in the *Transactions*, if the Council see fit.

Copyright of papers shall be the property of the Institution.

42. The copyright of any paper read at a meeting of the Institution, with its illustrations, shall be the exclusive property of the Institution, unless the publication thereof by the Institution is delayed beyond the commencement

of the Session immediately following that during which it is read; in which case the copyright shall revert to the author of the paper. The Council shall have power, however, to make any arrangement they think proper with an author on first accepting his paper.

Members, &c., to receive copies of *Transactions*—Authors 30 copies of their papers.

43. The printed *Transactions* of each Session of the Institution shall be distributed gratuitously, as soon as ready, to those who shall have been Members, Associate Members, Associates, or Honorary Members of the Institution during such Session, and they shall be sold to the public at such prices as the Council shall fix. Authors of papers shall be entitled to thirty separate copies of their papers, with the discussions, as printed in the *Transactions*.

Special Meeting may be called by the Council, or on requisition by 25 Members.

44. Extraordinary or Special Meetings may be called by the Council when they consider it proper or necessary, and must be called by them on receipt of a requisition from any 25 Members, specifying the business to be brought before such meeting.

Voting.

45. Any question which, in the opinion of the President or the Chairman of the meeting of Council and Institution, is of a personal nature, shall be decided by ballot; all other questions shall be decided by a show of hands, or by any convenient system of open voting.

Who may Vote.

In all cases, not hereinbefore provided for, only Members, Associate Members, and Associates, shall be entitled to vote. Every Member, Associate Member, and Associate, shall have one vote only, which must be given personally.

Section VIII.—SUBSCRIPTIONS OF MEMBERS AND OTHERS.

Annual Subscription payable.

46. Each Member shall, on election, pay an entrance fee of £1, and for the current and for each Session thereafter an annual Subscription of £2.

Each Associate Member shall, on election, pay an entrance fee of £1, and for the current Session and each

of the two following Sessions an Annual Subscription of £1, and thereafter an Annual Subscription of £1 10s.

Each Associate shall, on election, pay an entrance fee of £1, and for the current Session and each Session thereafter an Annual Subscription of £1 10s.

Each Student shall pay an Annual Subscription of Ten Shillings, but no entrance fee.

In the case of Members, Associate Members, Associates, and Students, elected during March and April no subscription shall be payable for the current Session.

47. Honorary Members shall be liable for no contribution or subscription or entrance fee.

48. The Liability of any Member or Associate for future Annual Subscriptions may be commuted by the following payments, viz., in the case of a Member, by the payment of £25; and in the case of an Associate, by the payment of £20 and, in the event of such payment being made by a Member or Associate on his admission to the Institution, the same shall be in full of Entry Money as well as future Annual Subscriptions.

49. All persons transferred, in terms of Articles 10 and 11, to the Roll of Members, Associates, or Students, to be kept under these Articles, shall not be liable to pay any entrance fee, but for the Session, 1902-3, and thereafter they shall be liable for the Annual Subscription applicable to the Class to which they are transferred. All persons who, as Members or Associates under the former Articles of Association, had commuted their Annual Subscriptions by a capital payment to the Institution shall not be liable for any subscription, notwithstanding the terms of this Article.

When Annual Subscriptions due.

50. Annual Subscriptions shall become due on the first day of October in each year, and must be paid before 1st January following.

Members, etc., not entitled to vote if in arrear.

51. No Member or Associate Member or Associate, whose subscription is in arrear, shall be entitled to vote at any meeting of the Institution nor to receive copies

of papers or proceedings while the subscription remains unpaid.

52. Any Member, Associate Member, Associate or Student, whose subscription is more than three months in arrear shall be notified by the Secretary. Should his subscription become six months in arrear he shall be again notified by the Secretary and all his rights in connection with the Institution shall be suspended. Should his subscription become one year in arrear he shall be removed from the roll of the Institution unless the Council may deem it expedient to extend the time for payment.

Members, etc., retiring from the Institution.

53. Any Member, Associate Member, Associate, or Student retiring from the Institution, shall continue to be liable for annual subscriptions until he shall have given formal notice of his retirement to the Secretary. Contributions payable by Members, Associate Members, Associates or Students, shall be debts due to the Institution, and may be recovered by the Treasurer.

Remission of Subscription in certain cases.

54. In the case of any Member or Associate who has been long distinguished in his professional career, but who, from ill health, advanced age, or other sufficient cause, does not continue to carry on a lucrative practice, the Council, if they think fit, may remit the annual subscription of such Member or Associate, and they may remit any arrears due by him. Any such case must be considered and reported upon to the Council by a Committee appointed by the Council for the purpose.

Council may refuse to receive subscriptions in certain cases.

55. The Council may refuse to continue to receive the subscription of any person who shall have wilfully acted in contravention of the regulations of the Institution, or who shall, in the opinion of the Council, have been guilty of such conduct as shall have rendered him unfit to continue to belong to the Institution, and may remove his name from the Register, and he shall thereupon cease to be a Member, Associate Member, Associate or Student (as the case may be) of the Institution.

Section IX.—GENERAL POWERS AND PROVISIONS.

Powers of Institution in General Meeting

56. Any Extraordinary or Special Meeting of the Institution, duly called, shall have power, by a majority in number of the persons present thereat entitled to vote, from time to time, to review the decisions or determinations of the Council; to remove Members of Council; to expel Members, Associate Members, Associates, Students, or Honorary Members, from the Institution, and to expunge their names from the Roll; and to delegate to the Council all such further powers as may be considered necessary for efficiently performing the business of the Institution. At any Extraordinary or Special Meeting 50 Members shall be a quorum.

To delegate powers to Council.

Common Seal.

57. The Institution shall have a common seal, which will be under the charge of such of the Office-Bearers as the Council may appoint, and all instruments bearing the seal shall be countersigned as the Council shall direct.

Section X.—NOTICES.

Notices.

58. Notices requiring to be served by the Institution upon its Members, Associate Members, Associates, Students, or Honorary Life Members, may be served either personally, or by leaving the same, or by sending them through the post; and notices so posted shall be deemed to have been duly served. No Members, Associate Members, Associates, Students, or Honorary Life Members, who have not a registered address within the United Kingdom, shall be entitled to any notice; and all proceedings may be had and taken without notice to any such.

Inducire of Notices.

59. Notices for any General or Extraordinary or Special Meeting of the Institution must be given by the Secretary to all Members, Associate Members, Associates, or Honorary Life Members, at least four days before such meeting. Notices of any adjourned meeting shall be given at least two days before the

adjourned meeting is held. Such notices shall specify the nature of the business to be transacted and no other business shall be transacted at that Meeting.

Notices.

60. Notices for any meeting of Council must be given by the Secretary at least four days before such meeting. Notices for the meetings of Committees shall be given as the Council shall direct.

Computation o Induciæ.

61. In computing the *induciæ* of any notice the day on which the same is delivered shall be reckoned as an entire day

---

APPENDIX.

FORM A.

Form of Recommendation and Undertaking.

A. B..... of.....being upwards of..... years of age and being desirious of belonging to the Institution of Engineers and Shipbuilders in Scotland, I recommend him from personal knowledge as in every respect worthy of that distinction because (here specify distinctly the qualifications of the Candidate according to the spirit of Articles 5, 6, 7, and 8).

On the above grounds I beg leave to propose him to the Council as a proper person to belong to the Institution.

.....*Member.*

Dated this.....*day of*.....19

We, the undersigned, from personal knowledge, concur in the above recommendation.

.....*Member.*

.....*Member.*

I, the said A B., do hereby promise that in the event of my election I will abide by the Rules and Regulations of the Institution, and that I will promote the objects of the Institution as far as may be in my power.

.....

FORM B.

Form for Transfer from one Class to another.

A. B.....of.....having been a..... of the Institution of Engineers and Shipbuilders in Scotland for.....years, and being desirous of becoming a.....of the Institution, we, from personal knowledge, recommend him as in every respect worthy of being elected a..... of the Institution.

..... *Member.*

.....*Member.*

.....*Member.*

I, the said A. B., do hereby promise that in the event of my election I will abide by the Rules and Regulations of the Institution, and that I will promote the objects of the Institution as far as may be in my power.

.....

The Council having considered the above recommendation and undertaking approve of the same.

....*President (or Chairman).*

Dated this.....day of........19

BYE-LAWS.

MEDALS AND PREMIUMS.

Marine and Railway Engineering Medals.

1. Each of the two Medals founded by subscription, for the best paper in the Marine and Railway Engineering Departments respectively, shall be awarded by the vote of a General Meeting, not oftener than once in each Session.

Institution Medal.

2. The Council shall have power to offer annually a Medal for the best paper on any subject not comprehended by the Marine and Railway Engineering Medals. Such additional medal to be called the Institution Medal, and to be paid for out of the Funds of the Institution, until a Special Fund be obtained. This medal also shall be awarded by the vote of a General Meeting.

When Medals may not be awarded.

3. If it shall be the opinion of the Council that a paper of sufficient merit has not been read in a particular department during any Session, the Medal shall not be given in that department; and, in the case of the Marine and Railway Engineering Medals, the interest arising from the particular Fund shall be added to the principal.

Medals and Books may be awarded.

4. If the Person to whom a Medal may be awarded shall express a wish to receive a Bronze Medal, accompanied with the extra value in Books, in lieu of the ordinary Gold Medal, the award shall be made in that form. The Council may recommend premiums of Books in lieu of, or in addition to, the Gold Medals. The value of such premiums of Books to be determined by the Council.

MANAGEMENT OF THE LIBRARY.

Appointment of Library Committee.

5. The Council, at their first Meeting each Session, shall appoint eight of their number to form a Library

Committee, one of the eight to be Honorary Librarian and Convener of the Committee. Three Members of the Committee shall form a quorum.

Secretary shall have charge of Library.

6. The Secretary of the Institution shall have charge of the Library, and shall also act as Secretary of the Library Committee.

Powers of Library Committee.

7. The Library Committee, subject to the sanction of the Council, shall expend in Books and Library expenses the sums placed at their disposal, and, subject to the approval of the Council, may make Bye-Laws for the management of the Library, and appoint Assistants. The sum of £30 or thereby shall be expended annually out of the funds of the Institution, in the purchase of Books for the Library, in addition to the ordinary expenditure in binding, &c.

Duties of Library Committee and Annual Report.

8. The Library Committee shall annually make an examination of the property in connection with the Library, and report to the Council, detailing the state of the Library affairs.

LIBRARY BYE-LAWS AS TO USE OF BOOKS.

When Library is to be open.

9. Except during Holidays and Saturdays, the Library shall be open each lawful day from 1st May till 30th September inclusive, from 9.30 a.m. till 5 p.m. On Saturdays the Library shall be open from 9.30 a.m. till 1 p.m. On the 1st October and thereafter throughout the Winter Session the Library shall be open each lawful day from 9.30 a.m. till 8 p.m., except on Meeting nights of the Institution and Royal Philosophical Society, when it shall be closed at 10 p.m. The Library shall be closed for the Summer Holidays from the 11th July till 31st July inclusive.

Who may borrow books.

10. Books shall not be lent to any persons except Members, Associate Members, Associates, Students or Honorary Members of the Institution; but a person entitled to borrow books may send a messenger with a signed order.

Books for Consultation only.

11. The books marked with an asterisk in the Catalogue shall be kept for consultation in the Library only, and shall not be lent.

Librarian to keep Accession Book.

12. The Librarian and Assistant Librarian shall take their instructions from the Secretary of the Institution. They shall keep an Accession Book, in which shall be entered the particulars of all books purchased for or donated to the Library.

Register of books lent kept.

13. The Librarian, or Assistant Librarian, shall keep a Register, in which he shall enter the titles of the book or books lent, the date of lending, the name of the borrower, and the date of the return of the book or books to the Library.

Borrower to sign for books.

14. The borrower of the book or books, or, in his absence, the bearer of his order, shall sign his name to the entry of such borrowing in the Librarian's Register.

Librarian to certify return of books.

15. The Librarian, or Assistant Librarian, shall sign his initials to the date of the return of the book or books.

Books damaged to be entered in Register. Intimation to Library Committee, and notice to last borrower.

16. The borrower shall be responsible for the safe return of the book, and if it be damaged or lost he shall make good such damage or loss. Should books be returned in a damaged condition, the Librarian, or Assistant Librarian, shall immediately make an entry of the fact in the Register, and report the same to the Library Committee without delay; and he shall give notice in writing of such entry, and report to the person from whom he last received the book, within three clear days of the receipt of the book, exclusive of the day of receiving the book and the day of giving such notice.

Number of books which may be borrowed at one time.

17. No person shall be entitled to borrow, or have in his possession at one time, more than two complete works belonging to the Library, or two volumes of any periodical.

Persons in Arrears of Subscription not to have use of Library.

18. No person being six months in arrears with his subscription to the Institution shall be at liberty to use the Library or Reading Room.

Time books may be retained.

19. No borrower shall have the right to retain a book longer than thirteen clear days, exclusive of the days of borrowing and returning; and written notice shall be sent to the borrower one day after the time has expired. In no case shall any book be kept longer than twenty clear days.

Lots to be drawn when two may apply for the same book.

20. In the event of two or more persons applying for the same book at the same time, the applicants shall draw lots for priority.

Introduction of friends to Reading Room.

21. Each Member shall be entitled to introduce a friend to the Reading Room, whose name shall be written in the Visitors' Book, together with that of the Member introducing him.

Annual scrutiny of books.

22. All books belonging to the Library shall be called in for inspection, and the lending out of books shall be suspended in each year for one week, being the last seven clear days of March; and all Members shall be required, by an intimation to be inserted in the notice calling the preceding meeting of the Institution, to return all books in their hands to the Library on or before the day next preceding the period before mentioned.

NOTE.—The Library and Reading Room are open to Members, Associate Members, Associates, and Students; and the Library of the Philosophical Society is open for consultation.

WILLIAM BROWN, *Convener.*
WM. M. ALSTON.
PROF. A. BARR, D.Sc.
W. A. CHAMEN.
E. HALL-BROWN.
WILLIAM MELVILLE.
JOHN STEVEN.
JOHN WARD.

EDWARD H. PARKER,
Secretary.

21*st April*, 1903.

INSTITUTION
OF
ENGINEERS AND SHIPBUILDERS
IN SCOTLAND
(INCORPORATED).

FORTY-SIXTH SESSION—1902-1903.

ADDRESS BY PRESIDENT.

Delivered 31st October, 1902.

THE PRESIDENT said that in opening the proceedings of this Session of the Institution it was not his intention to deliver a formal Presidential address, but he proposed, with their permission, to make a few brief references to the affairs of the Institution. It would be observed from the report of the Council, which had been submitted to the meeting, that the Institution continued to progress. The number of members added to the roll during the past year might not have been so great as desired, still, the increase would not appear unsatisfactory when it was considered that the names of a number of members whose subscriptions were much in arrears, and who had ceased to take any interest in the affairs of the Institution, had been expunged from the roll.

The Session they were now commencing was the 46th of the Institution's existence. In four years, therefore, they would be in a position to celebrate its Jubilee. On looking over the printed record of the proceedings during that long period, they

could not but be gratified to find that there had constantly been associated with it many engineers of high eminence in all branches of engineering science, and practice. Engineers whose reputation was not only local, but national, and in many cases world-wide. The papers read and discussed dealt with almost every subject embraced by the term engineering, in its widest sense, and were a fair record of the progress of engineering science and practice during the last 50 years.

The rules and regulations which had hitherto guided the conduct of its affairs and the deliberations of its members were framed in 1857. The number of years during which they had admirably served their purpose was the best proof of the care and skill with which they were drawn up. It had been felt, however, for some years that the Institution had so far out-grown the anticipations of its founders that, the rules were no longer adequate to meet all the conditions of the altered circumstances and that they required to be amended and added to. This had now been accomplished, and the present Session commenced under new rules and conditions. This Session, therefore, might be said to mark a period in the history of the Institution.

The principal changes effected by the alterations made on the rules were,—That the number of members appointed to serve on the Council had been largely increased, thereby, it was hoped, adding to its efficiency and widening the interest amongst the members in the affairs of the Institution. That the class of Students had been placed on a more satisfactory basis, and membership in this class would now to a greater extent than hitherto be confined to young engineers who were undergoing their course of training, or, who had lately completed their pupilage, and for whom it was originally established. He was strongly of opinion that it was very desirable that the Members should be induced to take a greater interest in the Students' meetings than they had hitherto done, and he would suggest that a Member of Council should, at all events occasionally, preside over their meetings and guide their deliberations. In

accordance with the practice which had been found advantageous in other engineering societies, a class of Associate Members had been formed, which it was hoped would result in the admission of many younger men to membership, and enable them to take part in the discussions at the General Meeting. He would not further allude to the other changes which had been made in the rules, but would only express the hope that the new rules might lead to increased efficiency, and that the Institution would continue to advance both with respect to the number of its members and its usefulness under the new conditions, in as great, or even greater, degree than it had done under the old.

The advantages which engineers engaged in active professional work might derive from membership in institutions such as this were never greater, nor their possession more necessary, than at the present time, when scientific discoveries followed each other with startling rapidity, and almost every day engineers were called upon to solve some new problem in the application of those discoveries to practical purposes, and when progress in all the departments of engineering science and practice was so very marked. To keep pace with the progress of the times, engineers must keep themselves informed of the nature of that progress, and much of that information could only be obtained from the perusal of the Proceedings of the Technical Institutions; while the benefits that might be derived from attendance at the meetings and taking part in the proceedings, in assisting them to form more accurate and more comprehensive opinions of the relative importance of the subjects discussed, could not be over-estimated. The various sections into which engineering was popularly divided were so inter-dependent that the work of the engineer who devoted his whole energies to the study of one branch, to the exclusion of the others, was not likely to have the same value as that of the man who took an intelligent interest in and kept himself acquainted with the progress which was being made in other departments of engineering, and on which progress, advancement in the department which occupied his more imme-

diate attention might often depend. For that reason it was an undoubted advantage in an institution constituted as this was, that papers dealing with the whole range of engineering science were read and discussed to the mutual benefit of its members.

No one could, for a moment, doubt the usefulness of those societies which were constituted for the purpose of promoting the advancement of some special department of engineering, but he ventured to think that the multiplication of societies in this direction might not be without disadvantage. While many of the papers read at meetings of such societies dealt with subjects of special interest to, and could be discussed by, engineers who were devoting their attention to the development of a particular branch of engineering, yet there were many papers read at these meetings in which engineers engaged on other departments of engineering work were deeply interested, and to the discussion of which they could beneficially contribute. The different branches of engineering were mutually dependent on each other, and improvements in one branch often depended for their success on, and were sometimes suggested by, the investigations made in other branches.

One cause of the great success which attended the proceedings of the Engineering Congress held last year was that, the individual member in each section was a member of the whole and could, and in many cases did, take part in the discussions of papers read at several sections; and it had been suggested to him by one of their members that, much benefit might result if some arrangement could be arrived at amongst the various societies dealing with engineering subjects by which members might have similar privileges. The suggestion appeared to him to be well worthy of consideration. Its practicability he was not at present prepared to discuss, but it emphasized what he had just tried to point out, that an institution which recognised the wide scope of engineering science, and in which papers dealing with every subject connected with that science might be read and discussed, must be

of the greatest practical use to its individual members whatever might be the branch of engineering to which they were particularly devoting their attention.

There were embodied in the Report of the Council, reports by members who had been deputed to represent the Institution on various Educational and Technical Committees, giving a short *resumé* of the work done by those bodies, and it must be a source of satisfaction to the members that this Institution, through its representatives, had been able in some degree to contribute to the success which had attended the labours and investigations of those scientific bodies, and also to the progress that had been made towards the more perfect equipment and efficiency of the Technical College. He would also like to refer to what must have been a further source of satisfaction to them all, that on the commissions which were recently appointed by the Admiralty to enquire into certain questions affecting the efficiency of Naval construction and of machinery, three of the members selected to serve on those commissions were Office-bearers in this Institution. While this was, so far, a source of gratification, it seemed to him that the usefulness and importance of the Institution would be still further increased by its initiating investigations into some of the many engineering problems which required elucidation, and which were constantly being brought to the notice of members in the course of their daily work. The advisability of appointing a Research Committee to which such subjects could be referred, might even be considered. So far as he had been able to ascertain, no such investigation had been initiated by the Institution since 1874, when a long series of experiments on safety-valves had been conducted by a committee which was then appointed, and from these experiments much valuable information was obtained.

A few years ago the Council had under consideration a scheme for the appointment of representative members or local secretaries in different districts of the country, so as to increase the interest of engineers residing at a distance in

the work of the Institution, but no practical result was arrived at. He thought, however, that the subject should not be lost sight of, as it might be possible in that way to increase the importance of the Institution, and make it more what it professed to be—the representative Institution of engineering in Scotland. But before they could to any great extent enter on any of the many schemes which had been or which might be suggested for increasing its usefulness and efficiency, he was strongly convinced that they must have better and more commodious accommodation.

The building in which they were now met was erected twenty-two years ago, when the number of members was only one-third of of what it was now, and it had become quite inadequate for their requirements. They could not hope to emulate the Institution of Civil Engineers or the Institution of Mechanical Engineers in the erection of the palatial buildings which they had established for the accommodation of their members, but they did require more accommodation than a lecture hall, which was about all that they at present possessed. They certainly required more and better accommodation for their library, which now contained between 3,000 and 4,000 volumes. They should have a comfortable reading-room, and rooms where members might meet each other for the discussion of professional affairs. In a word, it was desirable that they should endeavour to establish a centre or home for engineering in Scotland. Of course, the difficulty in carrying out any such proposal was the financial one, but he thought that might be got over, and he proposed at an early date to ask the Council to appoint a small committee to enquire into and report on the whole question. This would not commit the Institution in any way, but on receiving that report the Council might be able to suggest some course of action for the accomplishment of that object. If they had a building such as he indicated, for their accommodation, it would add greatly to the pleasantness and comfort of their meetings. The members would be brought into closer touch with each other, and it would in many ways tend to increase the influence and prosperity of the Institution.

VOTE OF THANKS TO PRESIDENT.

Professor ANDREW JAMIESON in proposing a vote of thanks to the President for his pleasing address said, they could not expect another oration from Mr Foulis like the one he delivered last year, in which he had entered so fully into his own special branch of engineering, and wherein he touched so neatly yet briefly upon the many varied sections of engineering science and practice. The President had just brought before them three most important things. *Firstly*—That a Member of Council should preside at the Students' meetings. He knew of nothing which would help the Students more and stimulate them to get up interesting and useful papers. *Secondly*—That a Research Committee should be formed with the view of making experimental investigations upon engineering subjects. *Thirdly*—That more and better accommodation was required. If new premises could be acquired with due regard to the real advancement of the Institution, then no one would appreciate it more than those who, like himself, visited the Library frequently to read what they could not afford to buy. With these few words, he hoped that they would accord a most hearty vote of thanks to the President, in whom they placed the most implicit confidence, also, that he would do his utmost to forward all the proposed schemes during his term of office.

The PRESIDENT thanked Professor Jamieson for his kind reference to the few disjointed remarks he had made, and said he could assure Professor Jamieson that if the schemes he had sketched out were not carried through it would not be his fault. He would do all he could to carry them through.

STEAM TURBINES: WITH SPECIAL REFERENCE TO THE DE LAVAL TYPE OF TURBINE.

By Mr KONRAD ANDERSSON.

(SEE PLATES I. AND II.)

Read 31st October, 1902.

THE phenomenon of vapour escaping from a vessel in which water is boiling might have given the first impulse to the consideration of steam and its power, and the Egyptian philosopher, Hero mentions in his work on "Pneumatics" about a motor driven by steam. Hero's book was written in the second century, B.C., and from the description given it may be taken that the machine was what we would call a reaction turbine.

After the flourishing of science and art in Egypt, Hellas, and Rome, the mediæval night falls over the world, and very few signs can be traced of any efforts made in order to complete Hero's machine. First, in the fourteenth century some mechanics are said to have used a machine similar to Hero's, and some experiments seem to have been made in order to construct a motor driven by steam. With the increase in scientific knowledge one experiment was carried out after another, and more and more information was obtained respecting the properties of steam. The principles on which these experiments were made were widely different, and often very peculiar, but although some of the ideas must be considered good, none of the machines seem to have been capable of practical working.

During the seventeenth and eighteenth centuries, many inventors worked on the problem of the steam engine, or, as it was then called, the fire engine. Invention succeeded invention, but all were thrown into the shade by Watt's ingenious construction, known as the steam engine.

The original idea in constructing a steam motor was, however,

not to let the steam act on a piston, as Watt did in his engine, but to make a motor in which rotary motion was directly produced by the action of the steam, the driving medium working either by reaction or by impulse on a wheel. Even Watt himself worked on the problem of the direct rotating steam engine, as can be seen from the descriptions of his patents, and numerous inventors after him tried to solve the same problem. Only a few of these machines, however, have proved satisfactory in practice, and these few are of comparatively later date. They are of the turbine type, more or less similar to water turbines, of course modified to suit the driving medium, steam, which has many different properties, or even peculiarities, compared with water.

As mentioned previously, steam turbines are constructed either on the action, or reaction principle, or on these two combined. The best known constructions are the steam turbines invented by C. A. Parsons, G. de Laval, and M. Rateau.

The Parsons turbine was first constructed in 1884, at least that is the date of Parsons' first patents regarding his rotating engine. I do not know whether any machines were actually put on the market or running at the time stated, but naturally it has taken some time for the great inventor to complete his engine and make it fit to compete with the reciprocating engine, but, at the present time, the Parsons' steam turbine represents a steam motor quite comparable with, and in many cases surpassing, the best constructed steam engine of the reciprocating type.

Parsons' turbine is a machine combining action and reaction principles, the steam delivering its energy, and at the same time being expanded when it passes several rows of vanes fixed on the surface of a revolving cylinder. The steam either passes the vanes in a direction parallel to the axis of the cylinder—parallel flow turbines; or moves in a radial direction on a wheel—radial flow turbines. The first arrangement is, nowadays, the usual construction. The working steam passes one row of moving vanes, then a row of stationary guide vanes, then again a row of moving vanes, and so on, the steam being expanded all the time, so that when it

leaves the last row of vanes it is fully expanded out to the pressure which prevails in the exhaust pipe of the machine.

An essential feature about all steam turbines is that a very high speed has to be adopted for the moving parts. This is necessary, not only in order to get the machine small, light, and cheap, but also in order to utilize the steam to its best advantage. The construction of the steam turbine is in many ways peculiar on account of this feature, and careful construction of the elements, along with the very best materials and workmanship, are absolutely necessary, if a good and reliable turbine engine is to be a possibility.

During the time it has been on the market, the Parsons' turbine has been subjected to numerous reconstructions and improvements, and its famous inventor has taken all pains to work out and improve the details of the machine.

The principles of the Parsons' turbine are, I suppose, so well known that there is no need for me to describe this machine. Many very good results have been reported from trials with the engine when used either for stationary work or for marine propulsion.

Another steam turbine which, in practice, has shown favourable results, is that named after de Laval. Originally, it was constructed for direct driving of milk separators, and de Laval's first patents in this line are dated as far back as 1882. The machine was a reaction turbine, very much on the same line as the engine described by Hero. The driving wheel was a pipe bent in S-form, to which the steam was admitted through a stuffing box in the centre, where the shaft was also fixed. The steam issued from the open ends of the pipe, thus driving the engine round. It seems to have been very suitable for its work, and similar turbines direct connected to separators are still working. The construction of the engine, however, is not well adapted for working continuously and for long periods, as the steam consumption is rather great, the steam not being properly and advantageously expanded in the machine.

The present construction of the de Laval Turbine is founded on the action principle. The steam is blown from stationary nozzles against vanes or buckets fixed in the circumference of a wheel, and the steam thus impinging on the vanes drives the wheel round. There is only one row of buckets on the wheel, the steam in passing this row delivers most of its energy and is afterwards exhausted either to the atmosphere or to a condenser in the ordinary way. The principle of the machine is very similar to the action turbine for water as constructed by Girard. The arrangement will be easily understood from Fig. 1, which shows a perspective view of a turbine wheel and nozzles. As is the case with all action turbines, the working of the machine depends on the kinetic energy of the medium which drives it, and the higher the kinetic energy the more power is obtained. It is therefore important that the driving medium, which in this case is steam, should have a high kinetic energy, or (which is the same) that every pound of steam used should enter the turbine wheel at as high a speed as can be obtained, and further, that as much as possible of this speed should be utilized by the buckets of the turbine wheel.

A high speed of the driving steam is obtained by expanding the admission steam in conical nozzles, specially adapted and constructed for this purpose. The steam is expanded adiabatically from its original pressure down to the pressure which prevails in the chamber where the turbine wheel revolves. If for instance the turbine works with 200 lbs. admission pressure and 28 inches vacuum, corresponding to 0·93 lbs. absolute pressure, the steam is expanded in the nozzles from 200 lbs. per square inch above the atmosphere down to 0·93 lbs per square inch absolute pressure. This expansion gives the steam, which leaves the nozzle in a jet, a very high velocity of outflow. Professor Zeuner has made extensive tests on the outflow of steam, and has shown theoretically and also proved by numerous experiments, that if the steam is expanded adiabatically in the nozzle, all the potential energy of the steam is transformed into kinetic energy, and that the kinetic

TABLE I.

The velocity of outflow and the working capacity of dry saturated steam.

Initial steam pressure, lbs. per square inch.	Counter-pressure 1 atm.			Counter-pressure 2·4 lbs. per square inch absolute corresponding to 25 in. vacuum.			Counter-pressure 0·93 lbs. per square inch absolute corresponding to 28 in. vacuum.		
	Velocity of outflow of steam, feet per second.	Kinetic energy, ft.-lb. per second.	H.P. of 550 ft.-lb. per second.	Velocity of outflow of steam, feet per second.	Kinetic energy, ft.-lb. per second.	H.P. of 550 ft.-lb. per second.	Velocity of outflow of steam, feet per second.	Kinetic Energy, ft.-lb. per second.	H.P. of 550 ft.-lb. per second.
		Per lb. of steam per hour.			Per lb. of steam per hour.			Per lb. of steam per hour.	
60	2421	25·29	0·046	3320	47·57	0·087	3680	58·44	0·106
80	2595	29·06	0·053	3423	50·56	0·092	3793	62·08	0·113
100	2717	31·86	0·058	3520	53·47	0·097	3871	64·66	0·118
120	2822	34·37	0·062	3596	55·80	0·101	3940	66·99	0·122
140	2913	36·62	0·066	3661	57·84	0·105	3999	69·01	0·125
160	2992	38·63	0·070	3718	59·65	0·108	4045	70·61	0 128
180	3058	40·35	0·073	3764	61·14	0·111	4091	72·22	0·131
200	3115	41·87	0·076	3810	62 64	0·114	4127	73·50	0·134
220	3166	43·26	0·079	3852	64·03	0·116	4159	74·64	0·136
280	3294	46·83	0·085	3962	67·74	0·123	4229	77·18	0·140

energy of steam thus expanded is absolutely identical to the amount of work which the same steam would have done had it been expanded in the same proportion in the cylinder of an engine. The foregoing table gives the velocity of outflow of steam at different admission pressures, expanded in nozzles down to 1 atmosphere, 25 inches vacuum, and 28 inches vacuum respectively.

As will be seen from the foregoing table, the velocity of outflow of steam expanded adiabatically in suitable nozzles to the proper ratio is very high. Steam expanded in a nozzle from 280 lbs. pressure above the atmosphere down to 28 inches vacuum leaves the nozzle with a velocity of 4229 feet per second, or over 48 miles per minute. This steam jet would pass round the earth in 8 hours 37 minutes.

The expansion of the steam in the nozzle is obtained by making the passage conical, the steam travelling from a smaller section in the nozzle to a larger one.

In order to illustrate the properties of a steam nozzle, we may take, for instance, one for 200 lbs steam pressure and 28 inches vacuum.

Supposing that the admission steam is dry, *i.e.*, that it does not contain any moisture, then at the different sections, Fig. 2, the pressures, etc., will be as follow:—

Section A—

Pressure 200 lbs per square inch above the atmosphere.

Percentage of moisture, 0.

Specific quantity of steam, 1.

Section B—(the smallest section of the nozzle).

Pressure 110 lbs. per square inch above the atmosphere.

Specific quantity of steam, 0·96.

Velocity of the steam, 1500 feet per second.

Specific volume of the steam, 3·5 cubic ft. per lb.

Section C—(the largest section of the nozzle).

Pressure (28 inches of vacuum) 2 inches of mercury absolute pressure.

Percentage of moisture in the steam, 24 per cent.
Specific quantity of steam, 0·76.
Velocity of the steam, 4127 feet per second.
Specific volume of the steam, 256·8 cubic ft. per lb.

The proportion between the areas of the large and small section of this nozzle should be as 27·2345 to 1, or the proportion between the diameters of these two sections as 5·2187 to 1. If, for instance, the diameter of the small section is 6 mm., or very nearly $\frac{1}{4}$ of an inch, the diameter of the large section should be 31·31 mm., or nearly $1\frac{1}{4}$ inch. Through such a nozzle there passes 479 lbs. of dry saturated steam of 200 lbs. pressure per hour, neither more nor less. This fact of the nozzle passing only a certain amount of steam per hour is often used to ascertain the steam consumption of the turbines.

As mentioned previously it is important that as much as possible of the kinetic energy of the steam jet issuing from the nozzle should be taken up by the turbine wheel, and thus transformed into mechanical energy. The angle between the nozzle and the plane of rotation of the wheel is 20 degrees, and in order to obtain the maximum efficiency, the peripheral speed of the turbine wheel, *i.e.*, the linear velocity of the buckets, should be 34 per cent. of the velocity of the steam. The absolute velocity of the steam leaving the buckets is then 34 per cent. of the initial velocity, and the energy absorbed by the turbine wheel is 88 per cent. of the kinetic energy of the steam.

If, for instance, the speed of the steam entering the buckets of the turbine wheel is 4,000 feet per second, the speed of the steam leaving the buckets should be 1360 feet per second, and the number of horse-power per lb. of steam—

$$\frac{4000^2 - 1360^2}{2g \times 550 \times 3600} = \cdot 11$$

and the steam consumption per theoretical horse power:—

$$\frac{2g \times 550 \times 3600}{4000^2 - 1360^2} = 9 \cdot 1 \text{ lbs.}$$

The steam nozzles are placed in very close proximity to the buckets of the turbine wheel, in fact the distance is only 2 mm., or about $\frac{1}{16}$ of an inch, and consequently there is practically no loss of velocity between the steam jet leaving the nozzle and entering the buckets of the turbine wheel.

The speed of the turbine wheel, which for a velocity of the steam jet of 4000 feet per second ought to be about 1880 feet per second, or about 21 miles per minute, is, however, much lower for several practical reasons. At the present time the peripheral speed of the de Laval turbine wheel does not exceed 1380 feet per second, which should make a steam consumption of 9·8 lbs. per theoretical horse power. The following table gives the speed of some types of turbine wheels:—

TABLE II.

Speeds of the turbine wheels.

Size of turbine.	Middle diameter of wheel.	Revolutions per minute.	Peripheral speed, feet per sec.
5 H.P.	100 mm., 4 in.	30,000	515
15 ,,	150 ,, 6 in.	24,000	617
30 ,,	225 ,, $8\frac{7}{8}$ in.	20,000	774
50 ,,	300 ,, $11\frac{3}{4}$ in.	16,400	846
100 ,,	500 ,, $19\frac{3}{4}$ in.	13,000	1115
300 ,,	760 ,, 30 in.	10,600	1378

As may be seen from the foregoing table, the peripheral speed increases with the size of the wheel, and the larger the diameter the higher also is the peripheral speed. The 300 H.P. turbine wheel runs with a peripheral speed of 1378 feet per second in the middle of the buckets; the outside diameter of this wheel is 800 mm., or $31\frac{1}{2}$ inches, and the circumferential velocity of the wheel is 1450 feet per second, or more than 16 miles per minute. At this speed the wheel would travel round the equator of the earth in 25 hours.

On account of the peripheral speed of the turbine wheel not

being so high as it theoretically ought to be, there is, particularly at high admission pressure and good vacuum, a slight impact when the steam enters the buckets. This is, however, allowed, for practical reasons, and the energy due to the loss of speed by this impact is not entirely lost by the turbine, as will be seen later.

One advantage of the action principle of the turbine is that the turbine wheel can revolve quite freely in the casing. This is an essential feature of the machine, and moreover it would not be possible to run at the speed required should a tightening be necessary round the turbine wheel. The wheel does not touch anywhere, and all the steam on emerging from the nozzles must pass the buckets of the wheel, as the radial length of the buckets is always larger than the diameter of the steam jet. There is consequently no possibility of any steam leaking through the turbine, but it must of necessity pass the buckets and deliver its energy to the turbine wheel.

The high peripheral speed which, as previously seen, is necessary in order to obtain a good efficiency, has been obtained by allowing the turbine wheel to run at a very high velocity. A reference to Table II. will also show that the number of revolutions is much higher than the speeds formerly used in practical engineering.

The turbine wheel must be strong enough to stand the speed at which it is required to work, and the design and construction of this wheel are, therefore, of considerable importance. The stresses in the material of the wheel must, throughout the whole section of the wheel, be kept within the limits permitted for the material.

The wheel is made as a solid disc, on the circumference of which the buckets are dovetailed in, each bucket being made and fixed separately to the wheel. The buckets consequently load the circumference of the wheel with a radial force when the wheel is revolving. The amount of this force may be understood when it is mentioned that the centrifugal force on the bucket of a 300 H.P. turbine wheel, which bucket weighs 250 grains, is 15 cwts. when the wheel is running at its standard speed.

The stresses in the wheel are tangential and radial, and if we

call the radial stress P and the tangential stresses S, it is evident that both P and S vary with the radius R. Further, these stresses depend on the axial thickness of the wheel in each place, and they also affect one another.

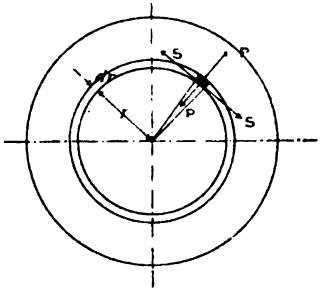

Fig. 2a.

Fig. 3 shows the stresses in a wheel for a 50 H.P. steam turbine. As may be seen by this diagram the wheel is so constructed that both P and S have their largest value at the circumference of the wheel, just where the buckets are fixed. Consequently the wheel is not made of uniform strength, but is strongest at the heaviest part, that is, in the centre.

It will be seen from Fig. 3 that the tangential stresses S in the boss of the wheel increase as they approach the hole in the centre of the wheel. These stresses would be still greater on the larger sizes of wheels, and in order to avoid these greater stresses the larger wheels are made without any hole through the centre, but the shaft is made in two pieces fixed to the wheel by flanges and screws. Fig. 4 shows the arrangement of small and medium, and also of the larger turbine wheels.

The part of the turbine which makes it possible to run the turbine wheel at its enormous speed, is the "flexible shaft." The shaft on which the turbine wheel is mounted has bearings on each side of the wheel at a good distance from it, and the shaft is consequently flexible and can allow the wheel to swing a little in its plane of rotation. No matter with what nicety the turbine wheel

may be turned and balanced, it is practically impossible to bring the centre of gravity of the wheel exactly into the geometrical centre round which the wheel revolves. The fault causes vibrations, which, if a firm shaft were used, would increase with the speed to such an extent that the bearings would instantly be ruined. With the employment of a flexible shaft there are also vibrations, increasing with the number of revolutions of the wheel. At a certain speed, however, the phenomenon arises that the vibrations suddenly disappear, and the shaft runs smoothly in its bearings.

The speed of the wheel at which this phenomenon arises is called "the critical speed of the wheel," and the phenomenon itself is termed "the settling of the wheel." The explanation is that the wheel at the critical speed takes a new centre of rotation, very near the centre of gravity, the shaft springing out and allowing this to happen. The reason for this phenomenon cannot be scientifically explained, but assuming, as is very probable, that the settling of the wheel occurs when the number of revolutions is equal to the number of vibrations which the shaft makes with the wheel mounted upon it, the critical speed can be calculated, and it is found to be—

$$n = C\sqrt{\frac{P}{Q}}$$

Where P = the force required to bend the shaft a certain distance,
Q = the weight of the turbine wheel,
C = constant.

This formula seems to correspond very closely with the results obtained at actual tests.

The flexible shaft and the turbine wheel are so proportioned that the settling of the wheel takes place very quickly, and the critical speed is from $\frac{1}{5}$ to $\frac{1}{8}$ of the standard number of revolutions of the wheel. Of course the turbine wheels are very finely balanced and the settling of the wheel is, therefore, scarcely perceptible. It is the flexible shaft that serves to transmit the power of the turbine.

The diameter of the shaft is, on account of the high speed, very small, and it is therefore easy to make it flexible. The shaft of the 300 H.P. turbine wheel has a diameter of 34 mm., or $1\frac{5}{16}$ inch, and that of the 150 H.P. wheel 25 mm., or 1 inch; no larger diameter is required.

The normal speed of the turbine wheel is too high for direct driving of ordinary machinery, and it is, therefore, reduced by means of gearing. This gearing is made on the double helical system, and machined with the greatest care and accuracy, as is necessary on account of the high speed. The speed of the gearing, that is the linear velocity of the teeth, is about 1000 feet per second. The pinion is made of hard steel (in one piece with the shaft) and the teeth of the gearing wheels are cut in a somewhat softer steel than the pinion.

All the revolving parts of the turbine are most carefully balanced, and the parts mounted on the shafts are centred by tapers. The bearings of the slow speed shafts are lubricated by rings as is usual in this class of machinery. The journals of the flexible shaft are oiled by sight feed lubricators. The bearings, which are all made as interchangeable bushes, are lined with white metal and there is practically no wear on them if the machine is well lined up and properly mounted from the beginning.

The turbines are generally fitted with more than one steam nozzle and these are arranged at intervals in a ring in close proximity to the turbine wheel, receiving the steam from a steam chest in the turbine case. Each nozzle is usually provided with a shutting-off valve so that any nozzle can be closed or opened at any time. This arrangement is of considerable advantage, as when the turbine is working at reduced load, some of the nozzles may be closed and a high efficiency of the machine maintained, even although it is not working at full load. This will be more plainly understood from the tests of steam consumption which will be noticed subsequently. The arrangement of a nozzle and its valve will be seen from Fig. 5.

Before the admission steam can enter the steam chest and pass from thence to the nozzles, it is regulated by the governor valve, which, in its turn, is controlled by the centrifugal governor of the machine. The governor valve is a balanced double-seated valve, connected with a link motion to the centrifugal governor.

The general arrangement of the machine will be understood from Fig, 6, which shews a turbine in section and plan.

The speed of the turbine is regulated by a very sensitive centrifugal governor, mounted horizontallyon the end of the gear-wheel shaft. The moving parts of the governor work practically without friction, and it is, therefore, very quick and powerful. This governor is very simple, although the construction may seem peculiar, and its dimensions are very small on account of the comparatively high speed at which it works. Fig. 7 gives an idea of the construction of the governor, and Fig. 8 shows some results as to its action on the turbine.

As shown by Fig. 8, the variation of speed between full load and no load is nearly one per cent, the variation is from 2 to 3 per cent generally.

The standard sizes of steam turbines can work with any steam pressure between 50 and 200 lbs per square inch, and either with or without vacuum. The only parts of the machine which have to be arranged to suit the admission pressure and the pressure in the exhaust are the steam nozzles, which have to be shaped according to the amount of expansion of the steam. The nozzles are made interchangeable—all other parts do not alter with the pressure—and the machine can consequently work with any pressure between the above limits if only the turbine case is provided with suitable nozzles. The turbine can also be arranged with nozzles for running both condensing and non-condensing, this is often very handy and convenient, particularly if the turbine drives its own condensing machinery, direct or electrically.

The de Laval steam turbine is mainly used as a *turbine motor* for driving machinery by means of belts or ropes; as a *turbine dynamo* for direct driving of dynamos; as a *turbine pump* for direct driving

of centrifugal pumps; and as a *turbine fan* for direct driving of centrifugal blowers and exhausters.

The turbine motor, Fig. 9, has belt or rope pulleys either on the gearing wheel shafts or on shafts connected therewith by flexible couplings. The peripheral speed of the belt, or rope wheels, is arranged to correspond to that velocity which gives the best efficiency of transmission. The turbine motor requires bolting down on its foundation on account of the pull from the belts or ropes. All other combinations of the turbine do not require any foundation bolts.

The turbine dynamo, Fig. 10, has the armature or armatures of the dynamo direct coupled to the driving shafts of the turbine. The larger sizes of turbine dynamos have two armatures, and these can be coupled either parallel or in series, or the machine can work direct on a three wires system. The speed is somewhat higher than that of ordinary dynamos and the dimensions are on this account very small. The efficiency is very high.

The turbine pump, Fig. 11. Another application of the turbine is to the direct driving of centrifugal pumps. The high speed has proved to be very favourable for this purpose, and it is possible to diminish the resistances in the pump; the turbine pump has, therefore, a very good efficiency. On account of the high speed, the pumps can be made for considerable lifts. The machine can be arranged with two pumps, corresponding to the arrangement of the turbine dynamos, and the two pumps can be coupled to work either parallel or in series. The following table gives some results obtained at tests with turbine pumps.

Particulars as to tests with a steam turbine pump for very high lifts will be given later on.

The turbine fan, Fig. 12. The excellent results obtained by the direct coupling of steam turbines to dynamos and pumps have been fully equalled in the direct driving of fans, ventilators, blowers and exhausters. On account of the high speed the turbine fan can deliver air of high pressure, and the machine can, therefore, be used as a blower for cupola furnaces, with great advantage.

TABLE III.

Results of tests with de Laval Steam Turbine Pumps

TYPE OF TURBINE PUMP.	Revolutions per minute.	Height of suction in feet.	Height of delivery in feet	Quantity of water delivered per sec. gallons.	Water H.P.	Brake H.P.	Efficiency.
50 H.P. duplex pump coupled in parallel,	1500	16·4	16·4	63·5	37·87	50·3	0·753
50 H.P. duplex pump coupled in parallel. Constructed for larger head of water than the previous,	1500	16·4	29·53	46·3	38·66	48·0	0·805
50 H.P. duplex pump coupled in series,	2200	19·7	137·8	12 3	35·22	50·3	0·700
20 H.P. duplex pump coupled in series	2315	9·84	85·3	82·5	14·27	20·0	0·713

The general opinion amongst engineers has been that steam turbines must necessarily use a considerable amount of steam, as the mass of the steam jet was considered too small to give a good impulse. In order to repudiate this opinion, attention is drawn to Table I. It is proved that the expansion of steam in nozzles gives the same amount of energy, I.H.P., per lb. of steam, as expansion in the cylinder of an engine, the problem being to

transmit as much energy as possible to the principal moving part of the turbine. There is, as previously mentioned, no leakage of steam and no appreciable loss by friction in the buckets of the turbine wheel, the only loss, and one which it is impossible to avoid, is the kinetic energy of the steam leaving the wheel. This loss may, perhaps, correspond to the imperfect expansion in the cylinder of an engine, but there is in the turbine no loss of steam from cylinder condensation, as the expansion takes place continuously and the cooling surfaces are small.

With respect to the resistances in the machine, these may be divided between pure friction losses in the bearings and gearing, and the resistance of the turbine wheel. The friction losses are very small indeed, and the resistance of the turbine wheel depends on the pressure of the medium in which the wheel revolves, and also on the medium itself. If this medium is very thin, the resistance is considerably decreased, and it is, therefore, of importance that the turbines should work condensing and with a good vacuum. At 28 inches vacuum the total resistances in the machine are about 7½ per cent. for the larger sizes of turbines. Fig. 13 shows the resistance of a turbine wheel under varied conditions. The results, as given, were obtained by tests with a 30 H.P. turbine at the Polytechnical College in Dresden.

From this figure it is evident that the power consumed in driving the wheel depends both on the pressure in which the turbine wheel revolves and on the nature of the medium in which it is running. The steam consumption of turbines at full and reduced loads, as obtained by tests on different sizes of machines, will be of interest.

In the first of these tests the work for condensing is included as the machine was driving its own condenser pump. In the other tests the work for condensing is not included as is usual in high-speed machinery.

The steam consumption per electrical unit of turbine dynamos cannot, of course, be so good at reduced load as the consumption per brake H.P. of the turbine motors, because the efficiency of the dynamo sinks at a reduced load.

TABLE IV.

Results of tests with de Laval steam turbines at different loads.

Turbine Machine.	Pressure of admission steam. Lbs. per sq. inch.	Vacuum inches of mercury.	No. of nozzles open.	Electrical H.P.	Lbs. of steam per electrical H. P. per hour	Remarks
50 H.P. turbine dynamo. The test made in April, 1895.	113·8	26·3	6	49·4	24·6	Work for condensing included.
	113·8	26·3	5	40·2	25·2	
	93·9	26·9	4	25·0	27·9	
	74·0	27·5	3	12·7	32·5	
100 H.P. turbine dynamo. The test made in June, 1897.	103·7	25·8	5	92·7	22·6	Work for condensing not included.
	103·8	26·4	3	55·6	22·7	
	107·4	26·8	2	35·0	24·7	
	106·7	27·9	1	15·5	27·8	
				Brake H.P.	Lbs. of steam per Brake H. P. per hour.	
150 H.P. turbine motor. The trial made in November, 1897.	113·8	26·4	7	163·0	17·6	Work for condensing not included.
	116·9	25·9	6	138·4	18·2	
	113·8	26·2	5	114·5	17·9	
	114·3	26·5	4	88·3	18·7	
	112·4	27·0	3	64·1	19·0	
	116·2	25·7	2	37·5	22·3	
300 H.P. turbine motor. The test made in December, 1899.	192·7	27·3	7	303·6	14·1	Work for condensing not included.
	196·3	27·6	6	255·5	14·7	
	196·3	27·6	5	216·9	14·4	
	196·3	27·6	4	172·6	14·5	
	190·6	27·8	3	121·6	14·9	
	196·3	28·1	2	74·2	17·2	
	213·3	28·5	1	31·5	21·6	
300 H.P. turbine motor. The test made in June, 1900.	126·6	26·98	8	337·45	15·68	Work for condensing not included.
	126·4	26·99	7	293·7	15·76	
	125·0	27·24	6	249·1	15·92	
	125·0	27·62	4	162·7	16·25	
	125·0	27·91	3	118·9	16·70	
	125·0	28·16	2	73·5	18·00	
	125·0	28·25	1	30·4	21·77	

In the tests with the 300 H.P. turbine, the steam was superheated, in the first case about 60 degrees Fah., and in the latter about 20 degrees Fah. It is evident that superheating is advantageous to the turbine, as it gives the steam jet a higher velocity and thus increases the kinetic energy of the steam, and it also diminishes the resistance of the turbine wheel, as illustrated by Table IV.

The use of superheated steam in connection with turbines has become more general in recent years. Practically, any degree of superheating can be used, as the highly heated steam does not come into contact with the moving parts of the machinery; by the time the steam reaches the chamber in which the turbine wheel revolves, it has already the pressure and temperature of the exhaust steam. In order to give some idea as to the steam consumption of the turbine when driven with highly superheated steam, I give some results obtained with the 30 H.P. steam turbine at the Polytechnical College, Dresden, referred to in Fig. 13.

From the results of these trials, it is obvious that not only the steam consumption but also the heat consumption (in H.U. per H.P. per hour), sinks with increased superheating. With constant peripheral speed of the turbine wheel and increasing superheating, the impact is increased on account of the higher velocity of the steam, but this loss is instantly transformed into heat, which raises the temperature of the exhaust steam, and thus diminishes the resistance of the turbine wheel.

The figures of the trials in Table V. are taken from the report in the German Engineering Society's paper of Nov. 30th, 1901. The turbine was run non-condensing only. Had the machine been worked condensing with, say, 28 inches vacuum, the figures obtained would have been about 50 per cent. less.

In order to illustrate how the steam consumption varies when superheated and saturated steam are used, some results are given of tests taken with a 300 H.P. turbine in New York. The tests were made by Messrs Dean & Main by request of the American de Laval Steam Turbine Co.

TABLE V.

Tests with a 30 H.P. steam turbine working with saturated and superheated steam respectively.

NON-CONDENSING

Steam pressure: 7 atmospheres absolute = 88·2 lbs.
Speed of driving shaft: 2,000 revolutions per minute.
Speed of turbine wheel: 20,000 revolutions per minute.

		HALF LOAD		FULL LOAD.	
		Saturated Steam.	Superheated Steam.	Saturated Steam.	Superheated Steam.
Temperature of the Steam	Centigrade ...	164	460	164	500
	Fahrenheit ...	327	860	327	932
Power developed	Metrical B. H.P.	21·4	24·5	44·1	51·9
	English B. H.P.	21·1	24·2	43·5	51·2
Steam consumption per B.H.P. per hour ...	Kilogrammes per metrical B.H.P.	21·6	14·1	17·7	11·5
	Lbs. in English B.H.P.	48·3	31·5	39·6	25·7
Heat consumption per metrical B. H.P. per hour in metrical heat units		14160	11270	11610	9390
Temperature of exhaust steam	Centigrade ...	100	309	100	343
	Fahrenheit ...	212	588	212	649

Results of Tests with a 300 b.h.p. de Laval Steam Turbine Working Under Various Conditions.

N.B.—In all of the statements made in this report of the consumption of superheated steam, the actual consumption without reduction to dry saturated steam as a standard, is given. This is customary, while with the results by saturated steam the moisture is deducted.

TESTS WITH SUPERHEATED STEAM.

Number of nozzles open, eight (8).
Average reading of barometer, 30·18 in.
Average temperature of room, 83° F.

Date. 1902.	Hour.	Weight of steam used per hour. Lbs.	Pressure above governor valve. Lbs.	Pressure below governor valve. Lbs.	Vacuum. In.	Superheat above governor valve.	Revs. per minute of generators.	Brake horse power.	Steam used per brake horse power per hour. Lbs.
	A.M.								
May 22	8—9	4833	208·3	200·6	27·2	81° F.		356·6	13·55
,,	9—10	4936	207·5	199·3	27·2	86° F.		355·7	13·88
,,	10—11	5083	207·7	202·1	27·2	91° F.		357·8	14·21
,,	11—12	4976	208·3	199·4	27·2	88° F.		354·1	14·05
,,	P.M.								
,,	12—1	4841	207·5	194·3	27·3	82° F.		343·5	14·09
,,	1—2	4768	206·9	195·6	27·2	75° F.		344·4	13·84
Independent average,	8—2	4906	207·0	198·5	27·2	84° F.	750	352·0	13·94

Number of nozzles open, seven (7).
Average reading of barometer, 30·07 in.
Average temperature of room, 90° F.

	P.M.								
May 22	2.10—3.10	4316	207·5	196·2	27·4	67° F.		299·8	14·39
,	3.10—4.10	4248	207·3	197·9	27·4	61° F.		297·3	14·29
Independent average,	2.10—4.10	4282	207·4	197·0	27·4	64° F.	756	298·4	14·35

Number of nozzles open, five (5).
Average reading of barometer, 29·79 in.
Average temperature of room, 89° F.

Date. 1902.	Hour.	Weight of steam used per hour. Lbs.	Pressure above governor valve. Lbs.	Pressure below governor valve. Lbs.	Vacuum. In.	Superheat above governor valve.	Revs. per minute of generators.	Brake horse power.	Steam used per brake horse power per hour. Lbs.
	A.M.								
June 10	8.45 – 9.45	3068	199·2	196·5	27·6	8° F.		195·3	15·71
,,	9.45 – 10.45	3010	201·5	197·2	27·4	12° F.		197·3	15·26
,,	10.45 – 11.45	3020	201·4	196·1	27·4	10° F.		196·5	15·37
Independent average,	8.45 – 11.45	3033	200·7	196·6	27·5	10° F.	743	196·5	15·44
	P.M.								
June 10	1.45 – 2.45	3107	201·4	196·7	27·4	13° F.		194·8	15·95
,,	2.45 – 3.45	3054	203·1	199·0	27·3	15° F.		197.9	15·43
,,	3.45 – 4.45	3025	202·7	197·5	27·4	19° F.		194·7	15·54
Independent average,	1.45 – 4.45	3062	202·4	197·7	27·4	16° F.	747	196·0	15·62
Average of both tests,							745		15·53

TESTS WITH SATURATED STEAM.

Number of nozzles open, eight (8).
Average reading of barometer, 29·92 in.
Average temperature of room, 90° F.

Date. 1902.	Hour.	Feed water weighed per hour. Lbs.	Condensation from separator. Lbs.	Moisture in steam at throttle by calorimeter. %	Dry steam entering turbine Lbs.	Pressure above governor valve. Lbs.	Pressure below governor valve. Lbs.	Vacuum. In.	Revs. per minute of generators.	Brake horse power.	Dry steam used per brake horse power per hour Lbs.
	A.M.										
May 23	8.15 – 9.15	5289	70	2·15%	5107	204·7	196·2	26·7		332·2	15·37
,,	9.15 – 10.15	5073	,,	,,	4896	206·2	196·2	26·6		332·4	14·73
,,	10.15 – 11.15	5286	,,	,,	5104	207·2	196·3	,,		332·2	15·37
,,	11.15 – 12.15	5283	,,	,,	5101	207·4	198·9	,,		334·9	15·23
Independent average,	8.15 – 12.15	5233	70	2·15%	5052	206·4	196·9	26·6	747	333·0	15·17
Number of nozzles open, seven (7). Average reading of barometer, 29·90 in. Average temperature of room, 97° F.											
	P.M.										
May 23	12.45 – 1.45	4675	60	2·15%	4516	207·0	196·6	26·8		284·4	15·88
,,	1.45 – 2.45	4499	,,	,,	4344	207·7	196·4	26·8		285·2	15·23
Independent average,	12.45 – 2·45	4587	60	2·15%	4430	207·3	196·5	26·8	746	284·8	15·56
Number of nozzles open, five (5). Average reading of barometer, 29·83 in. Average temperature of room, 97° F.											
	P.M.										
May 23	3 – 4	3843	51	2·15%	3358	207·5	196·5	27·3		194·8	17·24
,,	4 – 5	3219	,,	,,	3100	207·8	195·1	27·4		195·6	15·85
Independent average,	3 – 5	3351	51	2·15%	3229	207·6	195·8	27·35	751	195·2	16·54

Number of nozzles open, three (3).
Average reading of barometer, 29·81 in.
Average temperature of room, 80° F.

Date. 1902.	Hour.	Feed water weighed per hour. Lbs.	Condensation from separator. Lbs.	Moisture in steam at throttle by calorimeter. %	Dry steam entering turbine Lbs.	Pressure above governor valve. Lbs.	Pressure below governor valve. Lbs.	Vacuum. In.	Revs. per minute of generators.	Brake horse power.	Dry steam used per brake horse power per hour. Lbs.
	P.M.										
June 10	6.35 – 7.35	1996	33	2·15%	1921	201·1	196·5	28·1		115·0	16·70
„	7.35 – 8.35	2098	„	„	2021	201·6	198·9	„		122·0	16·57
„	8.35 – 9.35	1984	„	„	1909	201·7	198·4	„		121·5	15·71
Ind. Av.	6.35 – 9.35	2026	33	2·15%	1950	201·5	197·9	28·1	751	118·9	16·40

All barometer readings are reduced to 32° F.

It has been seen that in the construction of the de Laval steam turbine, it is necessary to adopt a very high speed of the principal driving part of the machine. This speed is afterwards reduced in the machine by means of gearing, so that the turbine can be coupled to ordinary machinery. The general tendency at present is to increase the speed of everything, and it may perhaps be considered as a step in the wrong direction to reduce the speed of a machine. It may, therefore, be interesting to draw your attention to a machine now on the market which runs at the same speed as the turbine, viz., a centrifugal pump worked direct from the turbine and at the same speed. The machine consists of a steam turbine driving one centrifugal pump direct, and another by means of gearing. The slow-speed pump lifts the water and presses it into the high-speed pump which, in its turn, forces the water against a considerable head. The following table shows some of the results obtained by tests with one of these machines.

TABLE VI.

Results of trials with a de Lavel high pressure turbine pump. "Turbine Speed Pump."

	Height of delivery. feet.	Gallons of Water delivered per min.	Water H.P.	Lbs. of steam per water H.P. per hour.	
1st Trial ...	312	529	50	34·2	
2nd Trial ...	443	629	84·4	29·0	Work for condensing is included.
3rd Trial ...	509	529	81·6	31·3	
4th Trial ...	467½	640	90·7	30·6	
		530	75·0	32·2	
		430	60·9	35·1	
		286	40·5	43·1	

In these tests the machine was mounted at a considerable distance from the boiler, and the admission steam was consequently supplied to the turbine through a considerable length of piping, which gives one reason to conclude the steam was wet. Better results would probably, therefore, be obtained with dry admission steam, and with a higher steam pressure. The condensing water was supplied through a pipe from the slow-speed pump, and the machine consequently drove its own condenser. In the figures of the table, work for condensing is, therefore, included.

The combination of the de Laval turbine to other classes of machinery is receiving consideration, yet experiments in this line are not sufficiently advanced that these machines can be put on the market.

RATEAU'S TURBINE.

This construction of steam turbine is of very recent date, and so far the machine has not been put widely on the market. Rateau's turbines are manufactured by Messrs Sautter Harle

& Co, of Paris, and also by Maschinenfabrik Oerlikon, Switzerland. The machine has been designed with a view, it seems, to use as much as possible the advantageous parts of the Parsons as well as those of the de Laval constructions. Rateau's engine is on the action principle in order to get the same advantage as de Lavel's machine, viz., no leakage of steam past the vanes of the turbine wheel; and, further, Rateau uses several rows of revolving vanes in order to obtain a speed of the turbine more in accordance with Parsons' arrangement, thus avoiding the gearing which is necessary on the de Laval turbine.

Rateau uses several turbine wheels, all fixed on the same shaft. The steam issues from nozzles into the vanes of the first wheel and after leaving this first row of buckets, the steam is directed by some fixed vanes into the buckets of the next revolving wheel, and so on. Each wheel revolves in a compartment of its own, so that the turbine resembles several de Laval turbines one after the other on the same shaft. The principle is somewhat similar to Parsons' parallel flow turbine, but the wheels are most like those of the de Laval machine, of course modified as the speed of each wheel is comparatively slow.

The direct rotating steam engine, if of turbine principal, or of other construction, seems to be the modern problem in steam engineering. Looking through the publication of patents, almost every week some matters relating to the said problem can be noticed. This field is, therefore, now of considerable interest, and in the years to come we may expect to see several new turbines on the market, but I have only mentioned those machines which up to the present moment have proved successful in practical working, the engines in every respect fulfilling the demand of a modern machine.

The PRESIDENT said that they were all very much indebted to Mr Andersson for the excellent lecture he had given on the subject of Steam Turbines. It would not be very profitable to commence the discussion at such a late hour, and as Mr Andersson had given them so many figures and so much information it would be better

to wait till the paper was printed and in their hands. Mr Andersson had kindly consented to attend the next meeting and answer any questions, and also to show the models which he was unfortunately unable to exhibit that evening. When they had read the paper they would be in a very much better position to discuss it than they were now.

Discussion.

The PRESIDENT remarked that Mr Andersson's paper dealt with a subject of great interest to engineers. It had opened up the whole question of what was perhaps the most ancient, as it was certainly the most modern, system of utilizing the potential energy of steam, by first converting that energy into kinetic energy and using it for the direct production of rotary motion He thought that this system of the utilization of steam had got beyond the stage of experiment and that engineers had now to deal with it as a practical question. For many purposes it seemed to him that this method of application of steam energy possessed so many advantages that its development was bound to go on. But whatever opinion one might have of the comparative merits of reciprocating engines and steam turbines, he thought it must be admitted that this special form of turbine, described in the paper, was an exceedingly ingenious mechanical device and one which he was sure had only gained its present efficiency by a great deal of thought and much industry. The paper which Mr Andersson had given them was in many respects just what a paper of its kind should be. It gave a very lucid description of the machine and also a considerable number of figures shewing the results which had been attained in practical work. If any member wished to ask Mr Andersson any question regarding the turbine on the table, it might be well to do so now, so that they might have a clear understanding of the machine before commencing the discussion.

Mr HENRY A. MAVOR (Member) said that having had the pleasure of the acquaintance of this turbine for something like ten years, he presumed to open the discussion, if no one else was ready to do

Mr Henry A. Mavor.
so. There were many most interesting points in the machine. He thought he was right in saying that it had been first brought into public notice, outside of Sweden, at the Chicago Exposition, but since that time Mr de Laval had been working upon it, and he believed that very great improvements had been made. During that period he had had the pleasure of using a few of these machines, and he thought that experience in their use would fully corroborate the claim made in the paper that Mr Andersson had read. As a piece of workmanship, it was a most interesting study. Anyone who looked at the machine would realize what enormous powers of production and careful construction were required before it could be turned out to do the work that it was doing; but the principles involved in the machine were also extremely interesting and instructive. He would like to ask Mr Andersson two important questions in connection with the development of the machine. He understood that Mr de Laval had made some most interesting practical experiments on the limit of velocity of the steel disc—for example, that he had taken a mild steel disc one metre in diameter, and put as much power on it as he could get into the shaft, simply accelerating the velocity of the disc. He understood that the acceleration was very rapid, and it was not easy to arrive at the exact speed, but if he remembered rightly the power stated to have been used was about 30 horse power to overcome the friction of the bearings and the air. At the speed produced, the steel disc showed signs of expansion. He wished to ask Mr Andersson if he knew whether that experiment had been carried further? It was a most interesting and important one, but he would not be disappointed if he did not get an answer to the question, because such experiments were carried out at enormous expense. The results had never been published in any form whatever, and therefore they must not be surprised if Mr Andersson informed them that he did not know. He mentioned that for the purpose of showing what very interesting work was being done by Mr de Laval, who had at one time a staff of about twenty gentlemen, all experts in engineering, who

did nothing else than experiment on matters connected with the development of Mr de Laval's inventions. The second point was that he understood Mr de Laval had been making some experiments in the use of ultra high pressure steam—the result of using saturated steam. His information was now two or three years old, but at that time steam at 200 atmospheres pressure had been experimented with, a pressure which was altogether impossible to use in any other kind of engine than a turbine engine. That steam was generated in a tubulous boiler and was used on the turbine when the interesting fact came out that every increment of pressure gave nearly the theoretical increment of efficiency. That was a very stimulating series of experiments, and it would be very interesting to know whether they had been carried out to a conclusion, and whether Mr Andersson was able to tell them anything more about them. Coming now to the detailed construction of the turbine, he was interested to see that the large spur wheel was made of steel; it used to be made of gun metal, and those present would find an inspection of that wheel and also the small wheel very much worth their while. The cutting of that wheel must be carried out with extraordinary accuracy. Anyone who knew how difficult it was to divide a wheel of that kind, knew what beautiful machinery and great skill must have been involved in the production of the wheel as it stood. He would like to ask Mr Andersson whether the steel wheel was found to wear better than the one of gun metal formerly used. These were the principal points that he had noted about the machine, but one might ask the question: Why this machine was not brought into more general use? It was admittedly one of the most wonderful productions in steam engineering. The reason seemed to be that, the use of very small engines was dying out, for reasons which electricians were perfectly well aware of, but if a steam engine was to be used on a very small scale it was evident that the de Laval turbine was one of the very best means of using turbines for small powers. When higher powers were considered there was great difficulty. He did not know whether the trouble had been got over or not, but when

powers above 100 horse power were used the noise of the gear was most disagreeable. That was the case in one of the last machines that he had had the pleasure of seeing. The vibration was probably not injurious, but the gear gave a peculiarly distressing, shrieking sound. A machine of the small size shown on the table, ran like a watch, and did not give any trouble or annoyance. It was surprising at first sight that these machines had not been applied to the driving of dynamos to a larger extent, but there were great difficulties in constructing continuous current machines for such very high speeds. Mr Parsons had been remarkably successful in producing a continuous current machine, and there the problem was exceedingly difficult, but the speed of Mr Parsons' turbine was much lower than that of this invention. It did not look as if one could expect that either a continuous current or an alternating current machine could be built on anything like ordinary lines for direct use on this turbine without the intervention of gearing. At one time it seemed possible that a simple disc might be available for use with such machines, but the difficulty of collecting a current from the periphery was, it would appear, at present insuperable. If, however, it were possible to devise some means of collecting the current from the periphery of such a disc as that shown, it was conceivable that that piece of apparatus, suitably constructed without any complication of winding, would do it. If it could be built of radial sectors with turbine buckets it might be used for dynamos, and the current could be produced without any further apparatus. If some means could be devised to collect the current from the periphery of the disc it would form a delightful 100 horse power combination as it stood.

Mr E. HALL-BROWN (Member of Council) said that like the last speaker he had great pleasure in reading the paper and he had tried to the best of his ability to understand all the facts set forth. The de Laval turbine was familiar to them all now as the very latest development, as the President had so ably put it, of the very earliest form of steam engine. It was a turbine in which the

potential energy of the steam was converted into kinetic energy before being used in the turbine wheel. In that respect it differed to a great extent from Parsons' turbine. The economical use of the kinetic energy of the steam in a single disc led to extreme speeds of rotation. He had made wheel cutting a very special study, and, he thought, they must all recognise the high degree of accuracy that had been attained in producing the small wheel which ran at something like 3,000 revolutions per minute while transmitting 5 or 6 H.P. Regarding the nozzles used in the turbine, it would be noticed that at Section A., before entering the nozzle the pressure was taken at 200 lbs per square inch, and at section B. it was given at 110 lbs. Was the steam expanded beneficially from 200 lbs per square inch to the vacuum, or simply in a satisfactory measure from 110 lbs? He was not very sure why the steam should only have 110 lbs. pressure at the smallest diameter of the nozzle. He supposed that there was some reason for the reduction of pressure and he would be glad if Mr Andersson would explain why it was. He was quite convinced that the de Laval turbine was a thoroughly satisfactory and economical machine, and it was only because he wished further information, that he ventured to speak. Mr Andersson had stated that when the speed of the wheel was not so high as theoretically it should be, the impact was increased on account of the higher velocity of the steam, but this loss was instantly transformed into heat, which raised the temperature of the exhaust steam and thus diminished the resistance of the turbine wheel. He wondered if the diminution of resistance was due to the fact that the heat so imparted evaporated some of the water in the exhaust steam, and thus reduced the friction between the wheel and exhaust steam.

Mr JOHN SIME (Member) called attention to the author's remarks on page 32, in speaking of the Rateau turbine, in which he said that "The machine has been designed with a view, it seems, to use as much as possible the advantageous parts of the Parsons as well as those of the de Laval constructions. Rateau's engine is on the action principle in order to get the same advantage as

Mr John Sime.
de Laval's machine, viz., no leakage of steam past the vanes of the turbine wheel; and, further, Rateau uses several rows of revolving vanes in order to obtain a speed of the turbine more in accordance with Parsons' arrangement, thus avoiding the gearing which is necessary on the de Laval turbine." Mr Sime assumed that there was a leakage, and that he thought Mr Denny would also admit. Mr Parsons admitted that there was a certain percentage of leakage in the Parsons' turbine, and he (Mr Sime) thought that Mr de Laval had not remedied that yet. Inventors who had studied the rotary principle had not overcome the difficulty, and he would like to know what the percentage of leakage was in the de Laval engine, and what tests had been made with respect to this matter.

Mr ALEXANDER CLEGHORN (Member) said that he would feel obliged if Mr Andersson would state the formulæ from which the velocities and pressures, (stated on pages 13 and 14 of his paper), for initially dry steam in flowing through the nozzles, were calculated. Were they of an empirical nature, deduced from special experiments? Or, had use been made of the ordinarily accepted theoretical conclusions, and if so, did these require any amendment to make them agree with experimental results obtained at the wide range of both initial and final pressures, indicated in Table I? Would Mr Andersson kindly supply the equations and their sources?

Mr M'WHIRTER (Member) remarked that Mr Andersson throughout the tables referred to brake H.P. Perhaps Mr Andersson might mention the sort of brake that was used. It would be interesting to know, at those high speeds, what form of brake was found most satisfactory.

Mr W. A. CHAMEN (Member of Council) said he had certainly learned more about the steam turbine from this paper than ever he had known before; but there were two questions—if Mr Andersson was not sick of questions—that he would like to ask. *Firstly*: Was there any end thrust on the shaft due to the nozzles being all applied to one side of the disc? *Secondly*: Did the

flexible shaft not result in breakage after a time, and was there any experience to show how long it would last without fracture?

Mr ROBERT HAIG (Member) asked if the curvature of the buckets was such that by applying another set of nozzles on the other side of the wheel, it would be possible to make the turbine into a reversing engine? He had not examined the diagrams to see whether this was possible or not, and, he thought it would depend upon the curvature of the buckets. There was no doubt it would be a great advantage if the turbine could be reversed.

Mr JOHN BARR (Member) observed that on page 22 there was a comparison between the brake H.P. and the water H.P. which gave an efficiency of ·75. It was usual with ordinary engines to have a comparison between the I.H.P. and the water H.P. so that the whole efficiency was given, including the power to drive the engine itself. If the efficiency of the engine was deducted the result would be lower than that given in the table. There was another point regarding a high-speed motor, which was this, that if used for ordinary slow-speed purposes, it meant that the second shaft which ran probably at 2,000 revolutions would require a very big reduction. Consequently the efficiency would be reduced to some extent before the power wanted on a shaft running at, say, 100 revolutions was acquired.

The PRESIDENT said that one very interesting feature was the method of allowing the turbine to find its own centre of gravity. This was done in different ways in centrifugal machines, and perhaps some member might like to make some reference to that matter. He would like to make one remark. One end of the shaft seemed to be held in two bearings, and at the other end, he understood, there was a moveable bearing. It seemed to him that when the shaft got off the true line, there would be a very considerable amount of friction between those bearings. Perhaps Mr Andersson would explain how that was overcome.

Mr ARCHIBALD DENNY (Vice-President), referring to the bearings said, he understood that two of them were rigid and the other flexible. Would this not subject the shaft to an alternate bending

action? While on his feet he would like to say something about the efficiency of turbines. By some, turbines were recognised as steam eaters, but they had before them Mr Andersson's results, and he thought no one could say that the steam consumption was excessive. In regard to Parsons' turbine, which worked on a different system, Mr Parsons claimed for the marine turbine a very high efficiency, and so far as his own experience had gone, the economy of the turbine had been found better than the triple-expansion twin-screw engines of which they had taken the place. It was impossible to measure the I.H.P. of either the Parsons' or the de Laval turbine. There was no means of doing it, and they could only deal at the very most with the brake H.P. After all it seemed to him that brake H.P. was the right measure to take. What they wanted to know was the power got out of an engine for a certain consumption of steam, not the power that was indicated by it: the efficiency of engines might vary very much.

The PRESIDENT said that Mr Andersson had imparted a great deal of information on various points that they did not expect would be raised in the discussion on his paper. Mr Andersson had consented to answer any questions that were sent to him, and he suggested that members should send their written communications through the Secretary, so that these, with Mr Andersson's replies thereto, might be embodied in the Transactions of the Institution.

Correspondence.

Mr E. Hall-Brown desired to know if the de Laval turbine had ever been used on board ship. In thinking the matter over, it appeared to him that the gyroscopic action, due to the high speed of the turbine wheel, would cause trouble when the vessel was moving in a sea-way. The clearance between the turbine wheel and the nozzles did not seem sufficient to prevent damage, even if the bending of the flexible shaft, which must take place when the vessel rolled or pitched, did not give trouble.

Mr C. A. MATTHEY (Member) thought Mr Andersson deserved

the best thanks of the Institution for his paper. In bringing his turbine to its present state, Mr de Laval had achieved several mechanical triumphs. First there was the jet, which practically imparted to the steam, in the desired direction, in the form of *vis viva*, all the energy which would be given out by adiabatic expansion in a non-conducting cylinder between the initial pressure and that in the condenser. It had long been supposed that there could only be so imparted the energy corresponding to expansion down to a pressure about 58% of the initial; that was to say, the velocity of efflux of steam of 100 lbs absolute was no greater if discharged into a perfect vacuum, than into a space where the pressure was 58 lbs. absolute. That was true for a converging nozzle, but Mr de Laval had, by the introduction of the diverging nozzle, made it possible to impart a velocity which represented almost the whole energy that the steam was capable of exerting between the limits of pressure employed. Next there came the utilization of this energy; and Mr de Laval, recognising the only means by which a good efficiency could be secured, had boldly employed linear and rotational speeds far beyond anything previously dreamed of by engineers. In so doing, he had to surmount difficulties of no small magnitude. When it was remembered that in the case of fly-wheel rims, even if made of steel without a joint, few engineers would venture on a speed exceeding some 350 feet per second, the linear speeds employed by Mr de Laval appeared truly astounding. Even he could not have succeeded if he had employed anything in the nature of a ring; for at the highest speeds mentioned the stress would approach 100 tons per square inch. But by employing a disc, say as a first step, one with parallel sides, the outer portions were prevented from stretching so much as if they existed alone, but were held back by the inner portions, which were stressed more than if they existed alone. Even this construction would fall short of what was needed, and Mr de Laval had conceived the original idea of making the axial dimension of the disc greater as the centre was approached. The calculation of the stresses in such a disc was

one of the most difficult problems in constructive mechanics, but he (Mr Matthey) was content to accept the curves given. The making of the disc without a hole in the middle was another happy idea. On looking at the perspective view, Fig. 1, one got the idea that the outer ring which encircled the buckets was a separate hoop in one piece; were it such it would inevitably burst. But on looking at the details in Fig. 5, one saw that what looked like a continuous hoop, was made up of the contiguous outer edges of the buckets. It would appear that the disc proper, that was so much of the wheel as had a continuous circumference, was loaded not only by the buckets, but by the material of the wheel between the "dovetails," as Mr Andersson called them. The construction of a wheel to run so loaded at such speeds was a mechanical achievement of the highest order, and could not be too much admired. It would be interesting to know whether Mr de Laval discovered the remarkable property of the "settling of the wheel" by accident while experimenting, or foresaw it by reasoning. He (Mr Matthey) thought he had read a few years back, that Mr de Laval had explained that the phenomenon was a gyrostatic one, and he thought that that was most probably true. As it was impossible to poise a disc with its centre of gravity exactly in its axis of rotation, or to make a pin stand on its point, so it was impossible to place the centre of gravity of the disc exactly midway between the bearings; then when the shaft bent, the plane of the wheel changed slightly and gyrostatic phenomena were exhibited. The steam consumption per brake H.P. was very moderate and compared well with that of reciprocating engines. If the doubts which arose in the minds of practical men, as to the durability of the gearing at these enormous speeds, proved to be groundless, the turbine would certainly become more widely adopted than it was at present.

Professor A. JAMIESON (Member) expressed regret that he could not be present at the discussion upon this interesting and instructive paper. He, however, desired to draw attention to the accompanying curves Fig.14, which he had plotted, with the view of

trying to explain, not only the sudden fall of pressure near to and in the throat of the steam nozzle of the de Laval turbine, but also the further fall of pressure along the conical part to its mouth. The full line curve, represented the natural loss of pressure in dry saturated steam as it expanded in accordance with Professor Rankine's well known formula $p\,v^{\frac{17}{16}} = $ a constant; where p was the pressure in lbs. per square inch absolute, and v the corresponding volume in cubic feet per lb. of steam. He had drawn this curve from 475 lbs. per square inch—at which pressure, 1 lb. of the steam occupied 1 cubic foot—down to 1 lb. absolute, at which it occupied 330 cubic feet. But, in the reduced figure, he had only included the range of pressures specially mentioned in the paper. The dotted line represented an adiabatic expansion curve to $p\,v^{\frac{10}{9}} = $ a constant, from 215 lbs. absolute at A, before entering the nozzle, down to 0·93 lb. at C, where it occupied 256·8 cubic feet, and left the nozzle with a velocity of 4127 feet per second with 24 per cent. of moisture. This curve passed through the point B, where the steam occupied 3·5 cubic feet, and had 4 per cent. of moisture, with a velocity of 1500 feet per second. Now, it was evident, from this curve, that if the potential energy of each lb. of static steam at A, had been so far converted into kinetic energy at B, that it had there a velocity of 1500 feet per second, and contained 4 per cent. of moisture, with an increase of volume from 2·11 cubic feet at A to 3·5 cubic feet at B, it must of necessity have fallen in pressure from 215 to 125 lbs. absolute pressure in doing so. This was in strict accordance with the natural law for the adiabatic expansion of steam. The temperature of the steam must also have fallen from 382° Fah. to at least 340° Fah. in this short passage. It might be, that the steam in passing from A to B, and from the very small throat of $\frac{1}{4}$-inch diameter, at the rate of 8 lbs. weight per second, naturally formed a *vena contracta*, due to "throttling"? In any case, it must there lose potential energy due to friction and increased velocity. This would account for its expansion from 1 lb. of dry saturated steam at A, to that of slightly

moist steam at B, with a corresponding and natural loss of pressure and temperature due to the partial transformation of its potential energy at A into kinetic energy at B, with the certified velocity of 1500 feet per second. He thought that the references to steam injectors and to ejectors, etc., did not help the solution of this problem one bit. The simple fact remained, that the steam had been proved to undergo these changes, and when these were coupled with a reference to the adiabatic curve of expansion, they seemed quite sufficient to account for the sudden drop in pressure up to B. Also, the further increase of volume and velocity down to its entry into the turbine wheel buckets, with almost all its potential energy and expansive properties taken out of it—when viewed by aid of the adiabatic curve—was a clear and complete solution of this, to some, an apparent paradox. It was somewhat curious that they should still be in doubt regarding certain points connected with the action of steam, but it must be remembered that it was employed at much higher temperatures and pressures than was the case 40 years ago. When viewed from a general standpoint, the action of steam in doing work in the Parsons' turbine might be considered as a gradual change of potential energy into kinetic energy, with gradual expansion and

Note.—In connection with this interesting subject it was worthy of note that considerable enlightenment might be derived from a careful perusal of some of the following papers, which were read and discussed at this Institution more than 40 years ago. See Proceedings of the Institution, Vols. II. and III., for papers on "Account of some Practical Experiments on the Economic Use of Steam in Steam Engines," by Mr Peter Carmichael, and "On the Treatment of Steam for the Development of Power," by Mr J. G. Lawrie. Also, the two very important papers by Professor W. J. Macquorn Rankine and Mr James Brownlee, in Vol. V., Session 1861-62, on "The Liquefaction of Steam, etc.," and "The Expansive Working of Steam," wherein special remarks were made *re* Regnault's erroneous (earlier) conclusions, as well as Mr Brownlee's statement on "The Friction action of Steam whilst passing through a small hole." Further, in Vol. XIX., Session 1875-76, "On the Action of Water and Frictional Resistance or Loss of Energy when flowing at various Velocities through a Nozzle with a Converging Entrance and Diverging Outlet," by Mr James Brownlee.

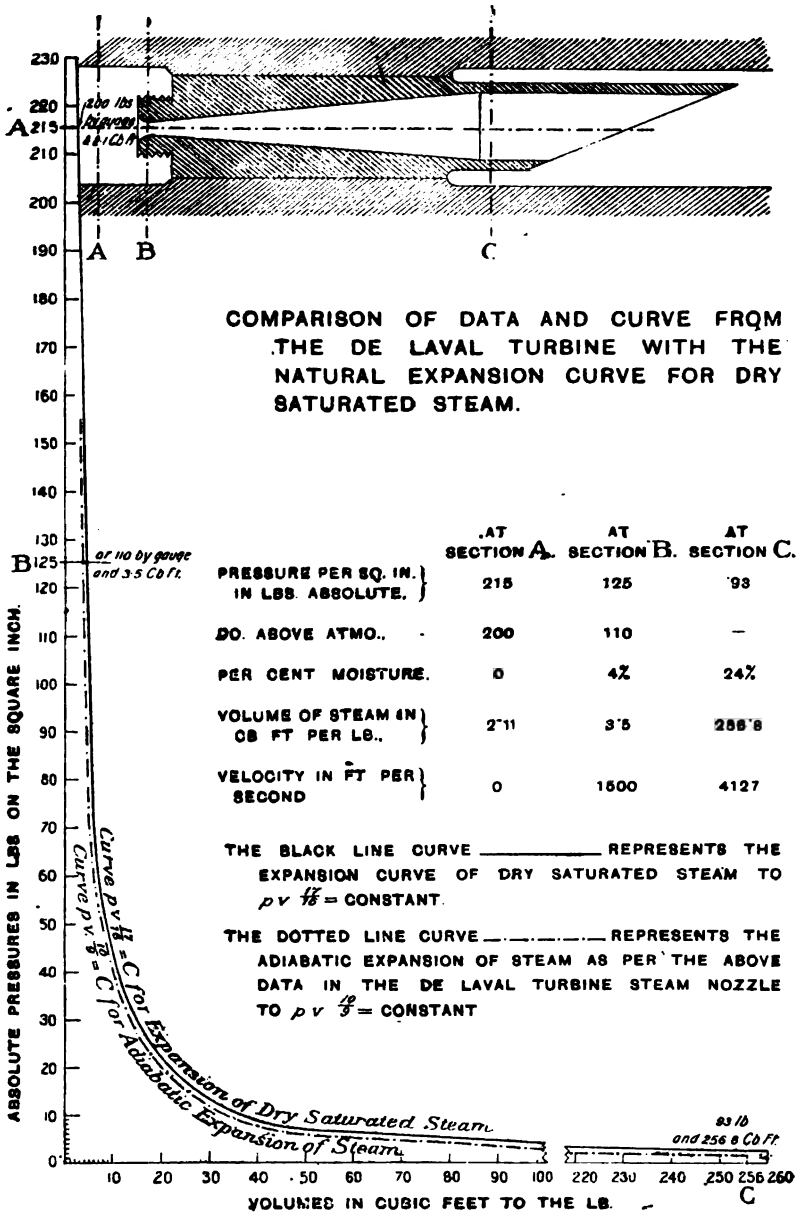

COMPARISON OF DATA AND CURVE FROM THE DE LAVAL TURBINE WITH THE NATURAL EXPANSION CURVE FOR DRY SATURATED STEAM.

	AT SECTION A.	AT SECTION B.	AT SECTION C.
PRESSURE PER SQ. IN. IN LBS. ABSOLUTE.	215	125	·93
DO. ABOVE ATMO..	200	110	—
PER CENT MOISTURE.	0	4%	24%
VOLUME OF STEAM IN CB FT PER LB..	2·11	3·5	256·8
VELOCITY IN FT PER SECOND	0	1500	4127

THE BLACK LINE CURVE ———— REPRESENTS THE EXPANSION CURVE OF DRY SATURATED STEAM TO $pv^{17/18}$ = CONSTANT.

THE DOTTED LINE CURVE —·—·—·— REPRESENTS THE ADIABATIC EXPANSION OF STEAM AS PER THE ABOVE DATA IN THE DE LAVAL TURBINE STEAM NOZZLE TO $pv^{10/9}$ = CONSTANT

Fig. 14.

loss of pressure along a stepped cone. Whereas, in the de Laval turbine, there was the more sudden transformation of potential into kinetic energy in a smooth cone, with its final slump utilization in the turbine wheel. The old Rankine cycle—with slight modifications as to the constants in the formula—seemed to suit all the apparent varying circumstances of different kinds of reciprocating engines up to those of the high-speed Willans' type, as well as steam turbines. Messrs C. A. Parsons & Co. had just informed him that they employed Rankine's formula with McFarlane Gray's modification for the maximum work that should be done theoretically per lb. of steam admitted to their turbines; and they said, "We generally find that the electrical horse power obtained is from 60 to 65 per cent. of what should be derived from the steam when driving electric generators." He reluctantly refrained from further remarks on Mr Andersson's paper, because he might have encroached upon the ground gone over at the discussion. But, he could not refrain from complimenting the author upon the more intimate knowledge which he had given in regard to the de Laval turbine.

Mr ANDERSSON, in reply said, from the very beginning of experiments with this turbine, Dr. de Laval found that it was necessary to adopt very high speeds if the machine were to be constructed on the action principle. A high linear velocity of the blades or vanes of the power-wheel of the turbine was only to be obtained either by using a small wheel running at a great number of revolutions or by employing a larger wheel running at a comparatively slower speed. There were, however, two points to be taken into consideration in the question of wheels or bodies revolving at a high rate of speed; one was the strength of the material of which the wheel was to be constructed, and the other was the resistance of the surrounding medium to the motion of the wheel due to surface friction. Both were of the utmost importance. Another matter which also had to be considered was the question of the bulk of the machine. It was found that the resistance of

the turbine wheel increased more rapidly with the diameter of the wheel than with the number of revolutions, and for this reason and on account of the bulk and weight, small wheels running at high speeds were used for machines of small power, and larger wheels running at a modified speed for larger turbines. As the question of economy became of more importance, the size of the wheels and also the number of revolutions in the larger unit of machine were so proportioned that, with increasing unit the velocity of the vanes of the wheel approached more closely to what it theoretically ought to be. This could be seen by Table II. In designing a wheel, a certain coefficient of safety was used, and fixed stresses in the material at different diameters of the wheel adopted. As shown on page 17, and by Fig. 3 on Plate I., the stresses were largest in the circumference of the wheel, and the sections of the wheel were so proportioned that the stresses increased with the radius. This was done in order that the wheel might be weakest in the circumference where the vanes were fixed, and in order to be still more certain on this point, a recess was turned in this outer portion of the wheel. Should a wheel burst on account of too high a speed it gave out at the recess, the vanes became detached, and the steam could not longer drive the wheel. The buckets of the detached parts of the wheel were so light that they could do no damage, and the machine only stopped running. With this type of wheel, the heavy central part had never burst. Indeed, it would be a very serious matter if the heavy part ever became detached from the shaft. When the calculations for a new wheel were completed, the material of which the wheel had to be made was tested, in order to see whether its strength corresponded to that on which the calculations were based. If agreement existed, the wheel was then made, and run until it burst at the periphery. Experience had proved that the speed at which the breaking of the wheel took place could be calculated beforehand, and if the speed obtained by experiment accorded with the theoretical result, the wheel was adopted as a standard for that particular type for practical use. The wheels were generally proportioned so that

breaking would take place when the wheel was running at about double the number of revolutions required in actual work; consequently, it could hardly happen in practice that the machine increased so much in speed that there would be any danger from the wheel breaking at its circumference. In order to keep the stresses down in the central parts, the wheels were made very thick towards the axis. If a wheel of the same thickness throughout were used, the stresses would be very great at the centre, and this was a matter to avoid in high speed machinery. It was best to do away as much as possible with the drilling of holes for bolts, etc., in the boss of a wheel, as holes considerably weakened the central parts, and it was very often the boss which had to keep the wheel together. As to the resistance to which the revolving wheel was subjected from the surrounding medium, this depended partly on the skin friction, and partly also to eddy making. It was found in practice that the resistance was almost exactly proportional to the density of the surrounding medium, and that it increased approximately with the fifth power of the diameter and the third power of the number of revolutions. It was, therefore, evident that the thinner the medium which surrounded the wheel the less would be the resistance offered to its motion, and this would be plainly understood from the curves in Fig. 13, Plate II. The resistance was less in saturated steam than in air of the same pressure, and it decreased with increasing vacuum. A 150 H.P. turbine-wheel was subjected to a resistance of 35 H.P. when running in steam of one atmosphere absolute pressure, but if it were run in a vacuum of 28 inches of mercury—2 inches of mercury absolute pressure—the resistance would be decreased in about the same proportion, and would be—

$$\frac{2}{30} \times 35 = 2\frac{1}{3} \text{ H.P.}$$

a gain of $32\frac{2}{3}$ H.P. The velocity of the steam jet issuing into vacuum was, moreover, higher than the velocity of outflow into the atmosphere, and both these circumstances made it essential

that turbine machinery should be run under vacuum. From Fig. 13 it was also evident that the resistance was less in superheated than in saturated steam, and that it decreased with the amount of superheating. Mr Mavor referred to the gearing, particularly with respect to the material used. The gear wheels were made of cast iron, and the teeth were cut in a ring shrunk on the cast iron body of the wheel. In the early stages of the machine this ring was made of gun-metal, but it was found practically impossible to obtain a gun-metal rim which had an even strength throughout. The material proved to be weaker in some parts than in others—perhaps on account of the ring when cast, cooling sooner in one place than in another—and the teeth gave way in the weaker parts. Fracture was *not* in any way due to friction. Rings of steel were now used, and the teeth never gave out. The friction was very small indeed, and there was practically no wear in the gearing. In England turbines had been running continuously for four years and there was no perceptible wear. A 100 H.P. turbine dynamo had been specially opened up and examined from time to time, but no wear could be measured; only the driving sides of the teeth were bright as if they had been polished. When running, the gearing of the smaller machines made a slight humming noise. On the larger machines, however, the noise was louder, and the reason was no doubt due to faulty division of the teeth. The less the fault in division, the less the noise, and with the present improved gear-cutting machines, the work turned out was much more accurate and consequently the noise in recent turbines had been diminished considerably; and there were good reasons to hope that the gearing could be still further perfected, as the turbine depended much on this element in its construction. Dr. de Laval experimented for a long time with a steam boiler specially suited to the turbine. The boiler was constructed for a very high pressure, namely, 200 atmospheres or 3000 lbs. on the square inch, of admission, and it was further made to produce superheated steam. At the Stockholm Exhibition in 1897, six such boilers were in operation, driving turbines installed for gener-

ating the necessary electric current for the exhibition. Four of these turbines were of 100 B.H.P. each, and two of 50 B.H.P. each. The boilers were briefly described in *Engineering* for 1897, and particulars were also stated in Bryan Donkin's book on steam-boilers. The boiler consisted of a long steel tube bent into a spiral; the feed-water was supplied at one end and the steam discharged through the other end of the tube. As the boiler contained so little water, it was arranged with an automatic feed-regulator as well as an automatic stoker. The boilers were fired with coal. The combined boiler and turbine plants worked very well and very economically; the only difficulty found during experiment, as well as in working, was the question of superheating. Every engineer who had had to deal with steam knew that as long as the steam was saturated, the temperature followed the pressure according to Regnault's formula, but as soon as the steam got superheated, the temperature could have any value for one and the same pressure. The very last efforts of which any particulars were known, were the experiments in connection with an automatic regulator for the temperature of superheating. As pointed out by Mr Mavor, it was impossible to drive an electric generator of the ordinary construction direct from the shaft of the turbine wheel. The speed was too high, and the stresses in an armature, running at the same speed as the turbine wheel, too great to allow of such a combination; besides the Foucault currents in the armature-plates would cause too much loss and even heating. A unipolar dynamo had been considered and many experiments carried out with such a generator. Using a Faraday disc, there was no difficulty in obtaining voltages of ordinary pressures. The difficulty was to collect the current at the outer periphery of the disc when running at the speed used on the de Laval turbines. Tesla had proposed to use two discs, one driving the other by means of a copper strip acting as a belt between the two wheels, and at the same time serving the purpose of conveying the current from the periphery of one disc to that of the other. The current should then go in through the axle of one

of the wheels, pass through the copper band and on to the other wheel, and finally go out through the shaft of this second wheel. Several arrangements had been tried to overcome the difficulties and one which had shown some good features was a modification of the Faraday disc. The problem was, however, far from solved yet, and it was, perhaps, too early to give any particulars of the construction of these machines. With respect to the steam-nozzles used in the turbines, it would absorb too much time to go fully into this matter. It would hardly be wise to state a formula for the flow, as asked for. Formulæ were very handy to use, and it was very convenient for an engineer to be able to take them, for instance, from a hand-book, but it was by no means a safe policy, as a formula might be used in a case where it did not apply. An engineer should never use a formula in his calculations unless he was thoroughly acquainted with the theory on which the formula was based. The outlines of the theory of the flow of steam might, however, be briefly stated, particularly as it threw a certain light on the other questions asked. According to Professor Zeuner, in a nozzle where the steam was adiabatically expanded the potential energy was transformed into kinetic energy. The kinetic energy of one lb. of steam was

$$\frac{w^2}{2g} \text{ foot lbs.}$$

Where w = velocity in feet per second and g as usual the acceleration of gravity in feet per second. Supposing that one lb. of saturated steam of an absolute pressure p_1 was adiabatically expanded in a nozzle down to pressure p_2, the following equation was obtained:—

(Internal heat at pressure p_1)
= (Internal heat at pressure p_2) + (kinetic energy at pressure p_2 expressed in heat units),

or which was the same thing:—The kinetic energy was equal to the difference between the internal heat at pressures p_1 and p_2.

If I_1 and I_2 were the internal heats at pressures p_1 and p_2 respectively, and J the mechanical equivalent of heat, the velocity would be

$$w = \sqrt{2g\,J \cdot (I_1 - I_2)}$$

The internal heat depended on the dryness-fraction of the steam, and this had to be calculated on the basis of constant entropy during expansion. The theory showed—and it was also proved by experiments—that in a converging nozzle it was a certain ratio between p_1 and p_2 which made the maximum amount of steam flow through the nozzle, and, further, that the maximum flow *always* took place if the circumstances allowed it. The ratio referred to was for saturated steam :—

$$\frac{p_2}{p_1} = 0{\cdot}577$$

and consequently

$$p_2 = 0{\cdot}577 \times p_1$$

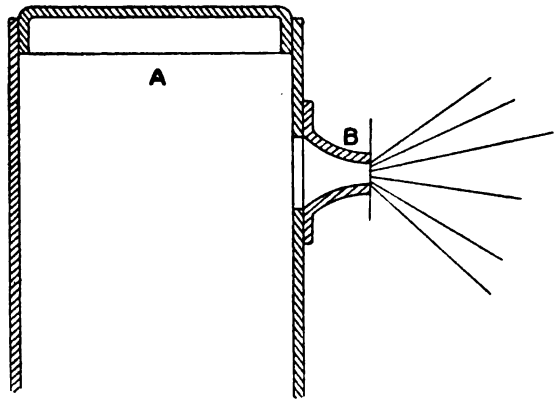

Fig. 15.

If, for instance, A, Fig. 15, were a steam boiler on which a conveying nozzle was fitted, and the smallest section of which was at B. With 200 lbs. pressure inside the boiler, *i.e.*, $p_1 = 214{\cdot}7$ lbs., the pressure of the steam at section B would be—

$$p_2 = 0{\cdot}577 \times 214{\cdot}7 = 123{\cdot}9 \text{ lbs. pressure absolute,}$$

or in ordinary gauge pressure

$$p_2 = 109{\cdot}2 \text{ lbs. per square inch.}^*$$

The steam had consequently a considerable pressure when leaving section B, and this could also be noted in practice, the steam diverging very much when blowing out into the atmosphere. In the converging part of the nozzle the steam was consequently expanded from 200 lbs. to 109·2 lbs. gauge-pressure, and in order to further expand the steam a diverging part of the nozzle had, so to speak, to be fitted to Section B. The nozzles used in the turbines were constructed on these principles, and by means of a suitably proportioned passage, first converging and then diverging, the steam was expanded from its original pressure down to the pressure of the exhaust, and a high velocity of outflow obtained. The steam leaving the nozzle had the same pressure as the surrounding medium (if the nozzle was properly constructed); it could not expand any further and must consequently leave the nozzle in a cylindrical jet. This jet impinged on the vanes of the turbine wheel T, Fig. 16, placed before

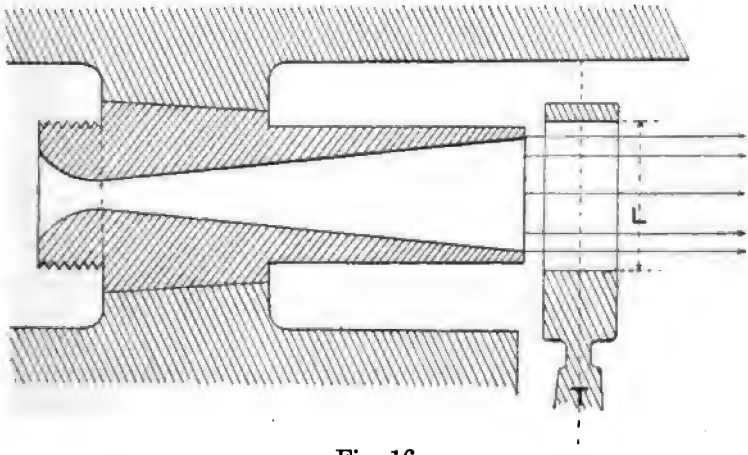

Fig. 16.

* *N.B.*—This pressure has been rounded off to 110 lbs. in the case of the nozzle, page 13 of paper.

the nozzle, and as the radial length L of the buckets was always larger than the diameter of the jet, all the steam leaving the nozzle must pass through the buckets. Nothing could leak past without going through the vanes and performing work. This had been proved by numerous practical experiments. The previously mentioned properties of the smallest section of a steam passage affected the working of several steam appliances, for instance, blow-off valves and safety valves. When the valves were just opened a smallest section was formed by the opening, and a smallest-section pressure was created. The area of the orifice through which the steam passed was, if h were the distance through which the valve had lifted

$$\pi \cdot d + h,$$

and in this area there prevailed a pressure which was 57·7 per cent. of the absolute pressure in the boiler. From these data the amount of steam which passed the valve could be calculated. The steam passing through a pipe very easily took a pulsative motion, and if this happened in Fig. 17 the smallest-section pres-

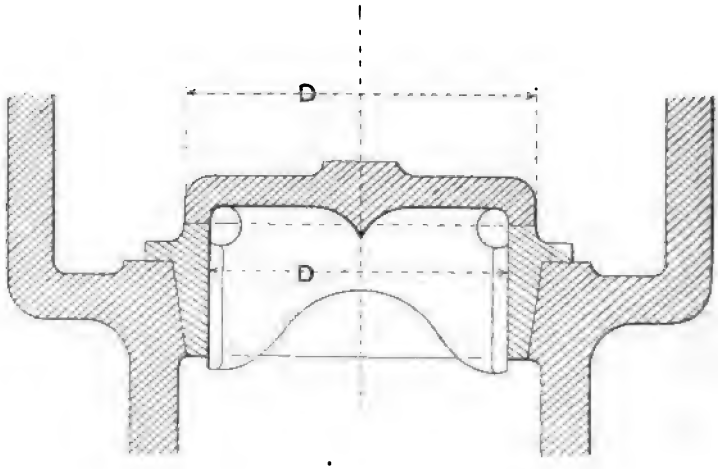

Fig. 17.

sure would vary between the area with diameter D and that with diameter D_1. The consequence of this was that the valve would

hum, a feature that would be remedied or partially remedied in practice by making the difference between diameters D_1 and D as small as possible. The above properties of the flow of steam were in reply to the questions raised by Mr E. Hall-Brown, Mr John Sime, and Mr Cleghorn. Mr Hall-Brown had further asked whether the diminution of the resistance of the turbine wheel, due to the impact in the buckets, was caused by the evaporation of some of the water in the exhaust steam, and this was actually what did take place. Mr M'Whirter desired to know what kind of brakes were used when testing the B.H.P. of the turbines. The type generally utilized was of the Prony pattern fitted on special pulleys. These answered very well, although they required a large amount of cooling water, which made testing a somewhat untidy business. As to the questions raised by Mr Chamen, there was a slight end thrust on the shaft, but it was very slight indeed. The shaft of the turbine wheel was kept in its position lengthways only by the helical teeth of the gearing. The end thrust was so slight that it never affected the working of the gearing in the least. The stresses in the material of the flexible shaft were very low, and as the gearing wheels acted as fly-wheels to the turbine, sudden changes of load were not felt momentarily in the flexible shaft. For instance, at an exhibition where a turbine dynamo was working at full load, an enormously heavy current was by mistake passed in the opposite direction through one of the armatures. The shaft of this armature was twisted off in an instant, but the flexible shaft was not affected at all, and neither were the teeth of the gearing. In reply to the question asked by Mr Robert Haig, the blades of the turbine wheel were not shaped so that it could be reversed by applying a jet of steam on the opposite side of the wheel. Reversing turbines had been considered for some time, but they had not yet been brought into practical use. The indicated horse power of a turbine could not be measured. This, however, was of very small importance, because in practice what was actually required was the amount of energy that could be distributed from the belt or rope wheels of the driving shaft of

the machine, or, in other words, the B.H.P. Lately, it had become quite a common thing for engine makers to state the motive power of their prime movers in B.H.P. The reduction of speed when the turbine was required for running slow-speed shafting was made in the same way as with an electric motor. If the required reduction were large, then a countershaft must be used, and the arrangement was quite as convenient as for an ordinary engine. The curvature of the flexible shaft, alluded to by the President, was very small indeed, on account of the wheel being carefully balanced. For this reason, there was no extra friction caused by the "settling" of the turbine wheel. When the flexible shaft with the wheel mounted on it revolved, it remained slightly bent, and the wheel revolved practically around its centre of gravity. Under such conditions the shaft was not subject to opposite bending actions, and the settling of the turbine wheel could therefore not have any effect on the nature of the material of the shaft by way of crystallizing it.

On the motion of the President, Mr Andersson was awarded a vote of thanks for his paper.

The author in reply to the correspondence stated with reference to Mr E. Hall-Brown's remarks that the turbines were used to a great extent on board steamers for driving pumping machinery and for electric lighting purposes. The gyroscopic action certainly affected the turbine, but generally steamers were so heavy that their movements, even in a rough sea, were comparatively slow, and under such circumstances the extra stresses in the shaft of the turbine, due to the motion of the vessel, were very small indeed. It was found that even on comparatively small steamers the rolling and pitching of the vessel in heavy weather did not interfere with the running of the turbine. When used for lighting railway trains it had been found that vibration did not, to any perceptible extent, interfere with the working of the turbine. It was extremely pleasant and interesting to hear from Mr C. A. Matthey, who possessed such a good knowledge of thermodynamics

and general mechanics. The value of the pressure in the smallest section, viz., 58 per cent., was the figure generally used, instead of 57·7 per cent. Dr. de Laval got the idea of allowing the wheel to "settle" by reasoning on the basis of gyroscopes and similar apparatus. An experiment was carried out, and it was at once clear that the flexible shaft was quite a feasible mechanical element. As to the questions raised by Professor Jamieson, these were practically dealt with in the reply to Mr Cleghorn. It might be considered beyond doubt that a smallest-section pressure actually prevailed; all the experiments made in the early stages of the turbine verified the theory, and proved the pressure to be as demonstrated.

SOME POINTS IN CONNECTION WITH THE RIVETED ATTACHMENTS IN SHIPS.

By Mr J. Bruhn, D.Sc., (Member).

(SEE PLATES III. IV. AND V.)

Held as read 25th November, 1902.

The usual method of estimating the value of a riveted attachment between two plates, is to compare the strength of the rivets with that of the perforated plate. It is assumed that the strength of the rivets is represented by their sectional area and the ultimate shearing strength of the material, and that the strength of the plate depends on the sectional area through a line of rivet holes, and on the ultimate tensile strength of the material. This method is, of course, based on the assumption that the entire forces on the plates are of the nature of direct tensile or compressive stresses, which may or may not be the case. Even if it is, many elements, besides those above mentioned, will affect the strength of the attachment. The rivets cannot have a uniform shearing stress through the whole of their sectional area, and a certain amount of bending must take place both in the rivets and in the plates. Both of these facts will affect the magnitude of the stresses. There is also a considerable amount of friction between the surfaces in contact, which will tend to reduce the stresses on the rivets, at least when they are not very high. The tensile strength per square inch of the perforated plate may, with drilled holes or by annealing after being punched, be greater than that shown by the breaking of the usual test pieces. The above method of estimating the strength of a riveted attachment could not therefore be adopted without proof of its sufficiency. On the whole, however, experiments appear to prove that where it is simply a case of attaching the ends of two plates subjected to a direct tensile stress, the method may be taken to be

practically correct. The whole of the force on the plates must under such conditions be sustained by the rivet attachment as indicated by Fig. 1, and the arrangement can be faithfully represented and the strength checked by experiments. The structure of a ship is not made up of independent strips of plating subjected only to tensile stresses, but it consists of individual parts, the stresses on which may be of a very complex nature, that cannot be exactly represented by the conditions of practicable experiments. A butt in the strake of the shell plating of a ship, Fig. 2, will be surrounded by other strakes, by stringer plates and angles, etc., which will assist the butt attachment and may do so to such an extent, that no accident would happen, even if the attachment of an individual butt were entirely severed. This goes to show that, if attachments are found by experiment to be sufficient for a detached strake of plating, they should be so if the strake is only one of many in the plating of a ship. But on the other hand, the nature of the stresses, the repeated change from tension to compression, and the effect of vibrations, might more than balance the assistance given by the material adjoining the butt. The question of the absolute sufficiency of a rivet attachment in a ship cannot therefore be decided by experiments or calculations, but must be settled by actual experience, which, however, appears to prove, that the method of the detached strake of plating may be safely employed. This, the usual method, is, as stated, based on the assumption that the whole of the forces on the plating are of the nature of direct tensile or compressive stresses, which have to be transmitted through the attachment.

The forces on the shell plating of a ship are not confined entirely to direct pull or push stresses. The only place where this is practically the case is at the gunwale near amidships. At the bottom plating there will, in addition to direct stresses, be bending stresses due to the pressure of the water tending to force the plating in between the transverse frames or floors. At other places, as towards the ends of the vessel, the thickness of

the plating is not governed by the direct structural stresses, but by the necessity of providing local strength against accidental pressure. Such local forces can practically only strain the plating by bending between the local supports. Where the plating has no other duty but to resist these bending tendencies, it is only necessary to have the rivet attachments capable of also doing so. In such cases it is, therefore, sufficient to compare the moment of the rivet attachment with the moment of the plating, and from the width of the necessary lap it will be evident that, even a single riveted attachment will be sufficient for the thickest plating, although the calculated so called efficiency percentage might be very small indeed. It will, therefore, be seen that the usual method of estimating the strength of a rivet attachment does not supply a criterion as to what is absolutely necessary, except in the case of the butts of the shell plating amidships. The method will, however, indicate the maximum strength of riveted attachment that would be required at any place. The minimun will be represented by what is necessary to efficiently close the surfaces for caulking. The strength of any butt or edge attachment should lie between these two extremes and should depend on its position in the structure. In some kinds of attachment, as in the case of the rivets connecting the shell plating to the frames, it is quite impracticable to employ the ratio method. In examining the question of the sufficiency of riveted attachments generally, the usual method must, therefore, be modified, and it becomes necessary to adopt the more general stress basis of comparison, as in the case of estimating the sufficiency of plate material. Before attempting this, it may be of interest to apply the old method to butt attachments.

The size of rivets used in ship work has been arrived at by purely practical considerations. The first idea no doubt was to have as large rivets as possible with a view to having fewer to hammer up. There is however a limit to the diameter desirable, as, if the rivet is too large in proportion to the thickness of the plating, it may tear through the plating long before reaching its own maximum strength. Besides the spacing corresponding to the larger dia-

meter may be too large for efficient caulking. The diameter of rivets in steel ships is approximately $\frac{t+1}{2}$ inches, where t is the thickness of the plating. Another approximate expression is $1{\cdot}15\sqrt{t}$ from which it will be seen that the diameter does not increase so fast as the thickness of the plating. This is entirely due to the practical considerations that, in the thin plates a rivet of comparatively large diameter can be hammered up with ease, but in the thicker plates it is necessary to adopt comparatively small diameters, so as to get a size which can be worked efficiently. There has thus been a tendency throughout to let smaller sizes of rivets be used in thicker plates than would perhaps otherwise have been desirable, and to make up in numbers for what is wanting in size, in spite of the larger amount of labour involved. This procedure has been more particularly necessary where hand labour only could be employed, as there is practically a limit to the size of rivets which can be efficiently hammered up by hand, but it increases the difficulty of obtaining an efficient attachment when the plates are increased in thickness.

In Table I. the ratios between the strength of the rivets and that of the solid plate are given, calculated for the thicknesses of plating and diameters and spacing of rivets usually adopted in shipbuilding. The diameter of the rivet hole, and therefore of the hammered up rivet, is one-sixteenth of an inch larger than the nominal diameter of the rivet. The sectional areas of rivets are throughout based on this increased or actual diameter. It is assumed that the ratio between the ultimate shearing strength per square inch of rivet material and the ultimate tensile strength per square inch of the solid plate is ·8, which would give an ultimate strength of, say, 24 and 30 tons for shear and pull respectively. The strength of a rivet in double shear has been taken to be double that of the same rivet in single shear. The spacing of the rivets is practically $3\frac{1}{2}$ nominal diameters apart, from centre to centre. In the Table the mean diameter of countersunk holes has also been given, as the spacing of the rivets has to be reduced by this

TABLE I.

Thickness of Plate.	Rivet Diameter	Rivet Hole.		Mean Countersink.	Spacing of Rivets Centre to Centre.	Ratio of Strength of Riveting to Strength of Solid Plate $= \left(\frac{\cdot 8\, A_1}{s \times t}\right)$				
		Diameter.	Sectional Area.			Single Riveted Lap.	Double Riveted Lap.	Treble Riveted Lap.	Quadruple Riveted Lap.	Double Straps Treble Riveted.
(t)	(d)	(d_1)	(A_1)	(d_2)	(s)					
Ins.	Ins.	Ins.	Sq. Ins.	Ins.	Ins.					
3/20	$\frac{1}{2}$	·562	·248	·687	2	·662	1·324			
4/20	,,	,,	,,	,,	,,	·496	·992			
5/20	$\frac{5}{8}$	·687	·370	·844	$2\frac{1}{4}$	·525	1·050	1·575		
6/20	,,	,,	,,	,,	,,	·440	·880	1·320		
7/20	$\frac{3}{4}$	·812	·518	1·000	$2\frac{5}{8}$	·450	·900	1·350		
8/20	,,	,,	,,	,,	,,	·395	·790	1·185		
9/20	,,	,,	,,	,,	,,	·350	·700	1·050		
10/20	$\frac{7}{8}$	·937	·690	1·156	$3\frac{1}{8}$	·354	·708	1·062		
11/20	,,	,,	,,	,,	,,	·320	·640	·960		
12/20	,,	,,	,,	,,	,,	·294	·588	·882	1·176	
13/20	,,	,,	,,	,,	,,	·271	·542	·813	1·084	
14/20	1	1·062	·895	1·312	$3\frac{1}{2}$		·584	·876	1·168	
15/20	,,	,,	,,	,,	,,		·548	·822	1·094	
16/20	,,	,,	,,	,,	,,		·512	·768	1·024	
17/20	,,	,,	,,	,,	,,		·480	·720	·960	
18/20	$1\frac{1}{8}$	1·187	1·110	1·467	$3\frac{15}{16}$		·500	·750	1·000	
19/20	,,	,,	,,	,,	,,		·474	·711	·948	
20/20	,,	,,	,,	,,	,,		·450	·675	·900	
21/20	,,	,,	,,	,,	,,		·430	·645	·860	
22/20	,,	,,	,,	,,	,,		·410	·615	·820	1·230
23/20	,,	,,	,,	,,	,,		·392	·588	·784	1·176
24/20	,,	,,	,,	,,	,,		·376	·564	·752	1·128
25/20	,,	,,	,,	,,	,,		·360	·540	·720	1·080

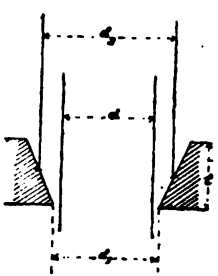

amount, where the ratio between the strength of the rivet and that of the perforated plate is wanted. It will be seen by a glance at this Table, and Fig. 3, which shows the results graphically, that the difficulties of obtaining an efficient butt attachment increase with the thickness of plating, simply on account of the necessity of using proportionately small rivets. To such an extent is this the case, that a quadruple riveted butt will be seen to be very little stronger in proportion to $\frac{25}{20}$ of an inch plating, than a single riveted butt is in proportion to $\frac{3}{20}$ of an inch plating. Or a double strap connection treble-riveted is actually not so strong for a $\frac{25}{20}$ of an inch plate, as a double-riveted lap is for a $\frac{3}{20}$ of an inch plate. When it is borne in mind that the ordinary direct stresses on the plating are usually increased with increased dimensions of the vessel, and, therefore, with increased thickness of plating, it will be clear that the question of obtaining efficient rivet attachment becomes one of greatly increasing difficulty as the size of vessels increases.

In order to substitute a stress basis of comparison for the above proportionate method, it is necessary to deal more or less with actual ships. A series of vessels of about the usual proportions have accordingly been taken, ranging from 100 to 700 feet in length. For the sake of comparison, they have all been assumed to be flush decked, or to have erections of such a nature that they would not enter into the strength of the vessel. The vessels are assumed to be of a fairly full form (·78 displacement coefficient). The thickness of the shell plating generally and the dimensions of the frames and reverse frames are in accordance with the usual practice for full scantling vessels. To obtain a more uniform basis of comparison, the sheerstrakes are increased in thickness, as is now usually done, instead of being doubled. The method adopted to determine the stresses on the rivet attachments is briefly the following:—A mean stress per square inch of material at the gunwale amidships has been assumed for each size of vessel. The stress is that which would be found by the ordinary bending moment and moment of inertia calculations, assuming the plating

to be solid, or that no deduction is made for rivet holes. The stress on the material in way of a line of rivet holes may then be estimated by assuming the stress to be increased above that on the solid plate in proportion to the reduced sectional area. This method will give nearly the same result as that arrived at by the usual deduction of the rivet holes in the moment of inertia calculations. It is simpler and it is probably more correct in principle, particularly in dealing with shearing stresses, in which case there can be no good reason why the rivet holes should be deducted above the neutral axis any more than below. The stresses on the solid plates at the gunwale and also in way of a line of frame rivets are given in Table II., and the results are shown graphically by Fig. 4. The steps in the curve giving the stress in way of the frame rivets is due to the closing up of the rivet spacing, which is usual with the wide frame spacing. The stress on the solid plate being known, it is a simple matter to determine the corresponding stress on the rivets in the butts of the sheerstrake. It is also necessary to assume a stress on the transverse material with which it may be possible to compare the stresses on the rivets affected by the transverse straining. The same maximum stress has consequently been assumed on the inside of the frames or reverse frames as was assumed at the plating at the gunwale. The assumption in this case is not so likely to be true as in the former case. Taking it to be absolutely correct would be supposing a rather more perfect distribution of transverse material than could actually be expected. There will probably be sudden increases and decreases here and there in the stresses on the framing, due to the difficulty in obtaining so uniform an increase in the strength as can be arranged for at the gunwale. When an additional tier of beams is introduced, or additional reverse frames fitted, there will most likely be a step one way or another in the stress on the transverse material ; but for the sake of comparison, in estimating the relative stresses on the rivets, we may assume the maximum stresses on the solid material of the transverse framing to be gradually increased according to the size of the vessel, as in the case of the stresses on the longitudinal material.

TABLE II.—BUTT RIVETING.

Length of vessel in feet. (L)	Breadth of vessel in feet. (B)	Depth of vessel in feet. (D)	Thickness of sheerstrake in inches. (t)	Size of rivets in inches. (d)	Size of rivets in inches. (d_1)	STRESS IN TONS PER SQUARE INCH OF MATERIAL. ON PLATE. On solid plate.	ON PLATE. In way of frame rivets.	ON RIVETS. Double riveted lap or strap. Rivets 3¼ diss. apart.	Treble riveted strap. Alternate rivets in back row omitted. Rivets 3¼ diss. apart.	Treble riveted strap. Rivets 3¼ diss. apart, in back row 6½ diss.	Treble riveted lap. Rivets 3½ diss. apart.	Quadruple riveted lap. Rivets 4 diss. apart.	Double straps, treble and double riveted. Rivets 2¾ diss. apart, 7 in back row.	Double straps, treble riveted. Rivets 4 diss. apart.
100	20	8	8/20	¾	·812	3·40	4·20	3·45	2·75	2·57	2·30			
150	25	12	10/20	⅞	·937	4·20	5·20	4·78	3·80	3·55	3·16			
200	30	16	12/20	,,	,,	4·90	6·05		5·35	5·00	4·45	3·82		
250	35	20	14/20	1	1·062	5·50	6·80		6·00	5·60	5·00	4·30	3·33	
300	40	24	16/20	,,	,,	6·00	7·40			7·05	6·25	5·35	4·17	3·57
350	45	28	17/20	,,	,,	6·40	7·90				7·10	6·10	4·75	4·05
400	50	32	18/20	1⅛	1·187	6·70	8·20					6·15	4·80	4·10
450	54	36	19/20	,,	,,	6·95	8·50					6·70	5·20	4·46
500	58	40	20/20	,,	,,	7·15	8·90						5·65	4·84
550	62	43	21/20	,,	,,	7·35	9·10						6·13	5·24
600	66	46	22/20	,,	,,	7·50	9·60						6·52	5·60
650	70	49	23/20	,,	,,	7·65	9·75							5·98
700	74	52	24/20	,,	,,	7·75	9·90							6·30

Let the stress per square inch at the sheerstrake be p, the thickness of the plate t, the spacing of the rivets s, their sectional area A_1, and the number of rows of rivets n, then the stress per square inch of rivet area will be :—

$$q = p \frac{t \times s}{A_1 \times n},$$

from which it will be seen that the result may be obtained almost directly from Table I. The particulars of the plating, riveting, and stresses are given in Table II., and, in addition, the stresses are represented graphically by Fig. 5. It will be seen that in nearly every case, particularly where the vessels are large, the stresses are considerably below those on the solid plate, which, if we assume the same factor of safety in both cases, agrees with the fact that the ultimate shearing strength of the rivets is less than the ultimate tensile strength of the plating. As regards the largest vessels, say those over 500 feet in length, it must be borne in mind that the sheerstrake would usually be doubled, in addition to being of increased thickness, and the stresses on the rivets would thereby be still further reduced in proportion to the increased number of rivets in the doubling plate. It will further be seen from the figures that double straps are much to be preferred to quadruple riveted laps, where the thickness of the sheerstrake is at all large.

The butt attachments under consideration have so far been assumed to be situated at the gunwale amidships. The usual calculations for the stresses on the plating give them a decided maximum value at or near amidships, and show them falling off quickly towards the ends, so that they are about half of their amidships value at about one-fourth the vessels length from each end. Under actual conditions the position of maximum stress must travel backward and forward within a considerable range. As far as the plating is concerned it is usual to assume that the range may extend over half the vessel's length amidships, which is probably on the safe side, particularly in large vessels. At the ends of the vessel the tensile or compressive stresses must be zero, and it

follows that for a considerable distance from the ends they cannot be great. At these places the thickness of the plating is governed by considerations of local strength, and these should, therefore, also determine the rivet attachments. There can thus be no necessity for having the same proportionate rivet strength at the ends of the vessel as amidships, and there would appear to be no good reason why the butt attachments at the ends should be stronger than the edge attachments, or why the edge attachments should be weaker than those of the butts.

We may next consider the stresses on the edge riveting of the outside plating. These are chiefly due to the unequal distribution of the tensile and compressive stresses in a fore and aft direction. Let Fig. 8 represent part of the plating of a vessel. If it is assumed to be situated amidships, then the pull or push on the ends of the strakes of plating above N N, the neutral axis will be equal and, therefore, balance each other. But if the figure represents the plating at some distance from amidships, then the pull or push on the ends of the plating above N N will usually be greater at the end nearest amidships. There will consequently be a tendency for each strake to move towards amidships, if tensile stresses be assumed, and the tendency will accumulate until it becomes a maximum at N N. This tendency for one strake of plating to slide past the adjoining one is the main cause of the stresses on the rivets in the edge attachments. These stresses have their maximum values at the places where the shearing forces across the vessel are greatest, that is, at about one-fourth the vessels length from each end, and at about from one-third to one-half the vessel's depth above the keel. Their magnitude is expressed by the formula:—

$$q = \frac{F \times m}{24 \times I \times t}$$

where F is the shearing force in tons at the point under consideration; I the moment of inertia of the transverse section of the material about its centre of gravity, measured in feet^2 and inches^2; m the moment about the neutral axis of the material either above

or below the point in the plating which is under consideration, measured in feet and inches[2]; t the thickness of the plating in inches; and q the stress in tons per square inch. The amidship values of I and m may be used without much error, as the increased depth of the vessel at the points of maximum shearing stresses may usually be taken to balance the reduction in the scantlings. Let d_1 be the diameter of the rivets in the edge attachment, s their spacing, and n the number of rows of rivets. The above formula may then be transformed so as to give the stress per square inch of rivet area as follows, viz :—

$$q = \frac{F \times m}{24 \times I \times t} \times \frac{t \times s}{\cdot 785 \times d_1^2 \times n} = \cdot 053 \frac{F \times m \times s}{I \times d_1^2 \times n}$$

For ordinary distribution of material, it is found, that if L is the length of the ship and M the hogging moment amidships, then the maximum shearing force is approximately $\frac{3 \cdot 5\, M}{L}$. Let Δ be the displacement of the ship, and let the bending moment amidships be $\frac{L \times \Delta}{35}$, which will be nearly true for full formed vessels with a uniform distribution of cargo and deep loading. It is found that the maximum shearing force is approximately one-tenth of the displacement. It is further found, from a large number of calculations, that if D is the depth of the vessel in feet from top of keel to top of beam, then the ratio I: (D × m) is practically constant for flush deck vessels of the usual proportions and distribution of material. It varied, in fact, only from ·810 to ·825 in vessels ranging from the smallest up to 700 feet in length. Taking ·815 as a mean for this ratio, we then have :—

$$q = \frac{\cdot 053 \times \cdot 1 \times \Delta \times s}{\cdot 815 \times D \times d_1^2 \times n} = \cdot 0065 \frac{\Delta \times s}{D \times d_1^2 \times n}$$

These stresses due to the shearing forces are calculated and are given in Table III., together with the thickness of side plating and size and spacing of rivets in edges of the plating, the stresses are also

represented graphically by Fig. 6. Besides the tendency of one strake of plating to slide past the adjoining one, there is another cause of stresses on the rivets in the edge attachments. When the sides of a vessel are subjected to what is known as panting, the frames and reverse frames are bent in between the tops of the floor and lowest tier of beams. There will then be a tensile stress on the outside plating of A and B, Fig. 8, which will throw a stress on the riveting of any edge attachment in the neighbourhood. The amount of the stress will depend on the stress on the transverse framing. Let i be the moment of inertia of a frame and reverse frame in conjunction with a strip of plating equal in width to one frame space, as indicated in Fig. 8; y the distance from the neutral axis to the heel of the reverse frame; and M_1 the bending moment, say at B. Taking the maximum stress on the framing to be p_1, then:—

$$p_1 = \frac{M_1 \times y}{i}$$

This maximum stress was assumed to be the same as that given in Table II, for the stress on the solid plating at the gunwale.

The mean stress on the outside plating will be:—

$$p_2 = \frac{M_1 \times y_1}{i} = p_1 \times \frac{y_1}{y},$$

Where y_1 is the distance from the neutral axis of the section to the centre of gravity of the plating. As p_1 is assumed to be known, it is an easy matter to determine p_2. The values of y and y_1 have been calculated in each case for the various dimensions of framing given in Table IV. The shearing stress on the rivets corresponding to the tensile strength p_2 on the plating may be found from:—

$$q = \frac{p_1 \times y_1 \times t \times s}{y \cdot 785 \times d_1^2 \times n}$$

Where d_1, t, s, and n have the same meanings as before. These stresses due to the bending of the framing are recorded in Table III. and are shown graphically by Fig. 6. In a fore and aft direction

TABLE III.—EDGE RIVETING.

Length of Vessel in feet.	Displacement in tons.	Thickness of plating in inches.	Size of Rivet in inches.		Spacing of Rivets in inches.	STRESS IN TONS PER SQUARE INCH OF MATERIAL.											
						Due to main shearing forces.		1 tier of beams.		2 tiers of beams.		3 tiers of beams.		4 tiers of beams.		5 tiers of beams.	
						Single riveted edge lap.	Double riveted edge lap.	Due to bending of framing	Combined stress.	Due to bending of framing	Combined stress.	Due to bending of framing	Combined stress,	Due to bending of framing	Combined stress.	Due to bending of framing	Combined stress.
(L	Δ	(t)	(d)	(d_1)	(s)												
100	300	6/20	$\frac{5}{8}$	·687	2·50	1·30		·35	1·35								
150	850	7/20	$\frac{3}{4}$	·812	3·00	2·10		1·00	2·32								
200	1,700	8/20	,,	,,	3·15	3·30		2·66	4·25	2·12	3·92						
250	3,000	10/20	$\frac{7}{8}$	·937	3·83		2·14	1·49	2·61	1·43	2.57						
300	5,000	11/20	,,	,,	3·43		2·65	1·80	3·21	1·80	3·21						
350	7,700	12/20	,,	,,	3·43		3·50			2·20	4·15	2·07	4·07				
400	11,100	13/20	,,	,,	3·57		4·60			2 66	5·33	2·62	5·30				
450	15,200	14/20	1	1·062	4·33		5·25			2·70	5·90	2·80	5·95				
500	20,000	15/20	,,	,,	3·85		5·50							2·08	5·90		
550	24,000	16/20	,,	,,	4·00		6·35							2·31	6·75		
600	28,300	17/20	,,	,,	4·15		7·30							3·50	8·10		
650	33,000	18/20	$1\frac{1}{8}$	1·187	5·00		7·75									2·64	8·18
700	38,000	19/20	,,	,,	4·43		7·40									2·55	7·85

they may have their maximum values at or near the places where the shearing forces are at a maximum, owing to the depth of the vessel being at this place, usually, considerably greater than at amidships, and the breadth not materially less. In a vertical direction the position of the maximum bending stresses may also happen to coincide with that of the maximum stresses due to the main shearing forces, as when the lowest tier of beams happens to be placed in the neighbourhood of the neutral axis. In the worst case the two maximum values have therefore to be combined. The resultant will not however be the sum of the stresses, but the square root of the sum of the squares, as the stresses are at right angles to each other. These resultant maximum stresses are also recorded in Table III. and in Fig. 6.

The stresses on the rivets attaching the outside plating to the frames are practically entirely due to shearing stresses of the same character as those experienced by the rivets at the edges of the outside plating. When the framing is being bent between its points of comparative support at the lowest tier of beams and at the top of the floors, then the outside plating will be thrown into tension at the points as at A and B, Fig. 8. The tension is, however, rapidly reduced and at some points turned into compression as the middle of AB is approached. These changes in the magnitude of the stresses on the plating can only be balanced by the stresses on the rivets attaching the plating to the frames. Let f be the shearing force at the point under consideration; i the moment of inertia of the frame section, including the outside plating, about a line through its centre of gravity; and m_1 the moment of the plating about the neutral axis; while t may be taken to represent the width of the frame flange. The shearing stress per square inch of bearing surface of the frame flange riveted to the outside plating, is then $\frac{f \times m_1}{i \times t}$. Let q be the shearing stress per square inch of the rivet area; s and d_1, the spacing and diameter of the rivets respectively, then:—

$$q = \frac{f \times m_1}{i \times t} \times \frac{t \times s}{\cdot 785\, d_1^2} = \frac{f \times m_1 \times s}{\cdot 785 \times i \times d_1^2}.$$

In order to obtain a value for f, we may assume th framing is being bent as a beam fixed at both ends and uni loaded, in which case the stress due to bending is :—

$$p_1 = \frac{M_1 \times y}{i} = \frac{W \times l \times y}{i} = \frac{2f \times l \times y}{i},$$

where W is the aggregate force or pressure in tons, l the di between the points of support in feet, and W × l, therefor bending moment in inch-tons.

From the above equation we obtain :—

$$f = \frac{i \times p_1}{2l \times y}.$$

The stress on the rivets attaching the shell plating to the fr is consequently—

$$q = \cdot 635 \frac{p_1 \times m_1 \times s}{l \times y \times {d_1}^2}.$$

p_1 is, as before, assumed to be equal to the stress on the material at the gunwale, and the stresses on the rivets are ca lated and recorded in Table IV. and Fig. 7 for the va dimensions of frames and reverse frames.

The positions of the maximum transverse stresses will, already pointed out, most probably be found towards the end the vessel, where the depth is greater than amidships owing to sheer of the vessel. Consequently, l has been increased over above the amidships depth by an amount equal to the depth fr the top of keel to the top of floors at the side of vessel, which amo has been assumed to represent the sheer at the point under co sideration. It will be noticed that these stresses on the frame riv are, on the whole, fairly high, considerably higher than those es mated for the rivets of the butts. It will, moreover, be seen, might be expected, that the stresses are highest where the mo tiers of beams are fitted. The stress on the frame rivets are th reduced by the omission of a tier of beams and the fitting of de framing instead, assuming the same bending stress on the framin

RS OF BEAMS.		FIVE TIERS OF BEAMS.		
Reversed frame. Inches.	Stress in tons per sq. inch.	Frame. Inches.	Reversed frame. Inches.	Stress in tons per sq. inch.
None	5·90			
,,	5·55			
4 × 4 × 13/20 alternately	6·62			
		9 × 4 × 4 × 13/20	None	6·15
		9 × 4 × 4 × 15/20	,,	6·00

in both cases. In the case of the 600 feet vessel there is a sudden increase in the stress, which is due to the fitting of a reverse frame to alternate channel frames instead of increasing the scantlings of the frames. The centre of gravity of the section of the girder and plating is thereby moved towards the inner edge of the frame, and m_1 is increased, while y is reduced. Probably, there would not be much, if any, increase in the stress in this case, as the bending stress on the framing would probably be somewhat reduced below that of the previous vessel by the introduction of the additional reverse frames.

To return again to the stresses on the edge riveting, to which it has been more particularly the object of this paper to draw attention, it will be seen that they are considerably higher than the maximum stresses on the butt and frame rivets in the case of the larger vessels, but smaller in the case of the shorter vessels. In other words these stresses increase with the same number of rows of rivets more rapidly with the size of the vessel than those on the butt and frame rivets with the usual arrangements of butt attachments and spacing of rivets. It will thus be evident, that additional riveting ought to be introduced at some point or other as the size of the vessel increases, if the same minimum factor of safety is to be adopted with regard to the riveting here as at other places in the structure. The additional riveting may be obtained by closing the spacing of the rivets somewhat. But this can, of course, only be done within certain limits, and will only reduce the combined stress to that shown by the upper ticked line, Fig. 6, assuming the maximum spacing of the rivets between the frames to be reduced from $4\frac{1}{2}$ to 4 diameters. This method will stave off the difficulty until the size of the vessel again gets too large, and then treble riveting must be resorted to. The stresses in the case of three rows of rivets are represented in Fig. 6 by the lower ticked line, and it will be seen that they are nearly as high as those on the rivets of double strapped butts at the sheerstrake of vessels of the same length. It will be noticed that there is a considerable increase in the stress due to

panting in the case of the 600 feet vessel. This is accidental and due to the fitting of the additional reverse frames to the channel frames, as in the case of the shearing stresses on the rivets attaching the shell plating to the frames. The remark then made also applies here, viz., that the stress on the framing will probably be reduced by the introduction of the reverse frames to something less than that of the preceding and following vessels, and that the stress on the rivets of the edge connection will consequently be proportionately less. For the assumed stress on the framing, the stress on the riveting will, however, be as shown.

So far the stresses have only been examined from the point of view of size of vessel and size and arrangement of rivets. A certain amount of assumption has necessarily had to be made, which may or may not be true in the individual case. It should, however, be unnecessary to again point out that the estimated stresses are entirely relative. A certain stress is assumed on the plating and framing of a ship and the corresponding stresses on the rivets are calculated accordingly. In the case of the butt rivets, the method is practically that of the proportion factor converted into a stress factor. Where the edge riveting is concerned some additional assumptions have necessarily had to be made, the chief element involved being the displacement. The assumption that the shearing stress on the edge riveting varies as the displacement is, of course, only strictly correct under similar conditions. It may be pointed out that the displacement is usually less than has been assumed in the case of the larger vessels, owing to the relatively lighter draught and finer form at present adopted in vessels of such size, but it must be borne in mind that in those cases, the actual calculated shearing forces and bending moments are usually large in proportion to the displacement, so that the coefficients for these quantities, viz., $\frac{1}{10}$ and $\frac{1}{35}$ may become somewhat larger, say, $\frac{1}{7}$ and $\frac{1}{24}$ respectively. The actual shearing forces and bending moments may therefore, even in those cases, be not very much less than those assumed, where the

distribution of weight and buoyancy is of the usual character. Where large concentrated weights, such as the water in deep ballast tanks, are carried, the shearing stresses in the neighbourhood will naturally be modified. The general tendency will be to increase the stresses at the termination of the weights. The fitting of deep tanks and the carrying of large quantities of water ballast is highly beneficial as far as the stresses on the bottom of the vessel are concerned, and the increased shearing stresses on the edge riveting should be provided against by the necessity of having sufficient strength for the loaded conditions of the vessel, when the local concentration of weights is less, but the displacement larger.

The above investigation has been based on statical conditions. The pitching and rolling of a vessel in a sea-way will tend to increase the stresses, but they may fairly be assumed to be increased in the same proportion, and the relative amount of stress as between ship and ship will therefore not be affected. The pitching will, however, probably have the effect of moving the positions of maximum shearing stress to points somewhat nearer the ends of the vessel than those indicated by statical calculations. This tendency will be accentuated enormously, particularly at the fore end, when the vessel is in ballast trim and her forward part may be falling on the top of a wave, thus receiving violent impact on the flat of the bottom.

In comparing the stresses on the rivets of butt attachments with those on the rivets of edge connections, it should be borne in mind, that there are several features which favour the former and which cannot conveniently be included in the calculations. The disposition of the material in the shell plating of a ship is one of them. Amidships the individual plates are arranged in a fore and aft direction with more or less efficient shifts of butts, thus providing the greatest strength in the direction of the greatest stresses. In the middle of the fore and after bodies of the vessel the plates are also arranged in a fore and aft direction, but at these places the greatest stresses are across the plates and therefore across the edge

riveting, or in the direction of greatest weakness. The entire amount of the shearing stresses must therefore be practically borne by the rivets in the edges, and the arrangement of rivet attachment at this place is in fact analogous to that of fitting the plates vertically amidships, and thus allowing the whole of the strength of that part of the structure to depend on a single butt attachment, or a ring of riveting extending right round the vessel. The only assistance which the edge attachments can receive from other parts of the structure is that due to the frames. A little consideration will, however, show that the assistance cannot be of much importance owing to the comparatively great flexibility of a frame between any two rivets attaching it to the shell plating, as compared with the rigidity of the edge riveting. In considering the stresses on the shell plating at the ends of a vessel, it will be apparent, quite apart from my calculations, that they ought to be assumed equal in all directions, as there is no reason to expect them to be larger in any particular direction than in any other. The edge attachment ought therefore not to be inferior to the butt attachment at this place. If anything it should be stronger, as it has to bear the same stresses as the butt attachment, which is assisted by the adjoining plates of solid material.

A point of some importance in connection with these stresses on the edge riveting is the difficulty of reducing them, if they are found too high. If the stresses on the gunwale are too high it is an easy matter to add material to reduce them by means of increased thickness, doubling plates, and by extra attachment in way of the butts; or the stresses may be reduced by increasing the depth of the girder. A reduction of the shearing stresses on the plating can be effected equally easily, if the vessel is not built, because the thickness of the plating can then be increased at the desired places. It is, however, difficult to reduce these stresses, if the vessel is already built. The thickness cannot be increased; doubling plates are not efficient unless the doublings are attached to each other by edge riveting; and any material added with a view to increas-

ing the moment of inertia (I) of the cross sections will at the same time increase the moment (m) and thereby neutralise the effect on the shearing stresses. With regard to the stresses on the edge attachments, it will be seen that, if the ship is already built, there is no convenient way of reducing them, and that, if the ship is building, there is practically only the rivet area at disposal for modifications. The rivet area can be reduced by increasing the diameter of the rivets, reducing their spacing, or by increasing the number of rows of rivets. The first two expediencies can only be adopted to a very limited extent, and there remains practically only the number of rows of rivets at disposal as a means of lowering the stresses.

It has sometimes been supposed that the addition of a tier of beams with, say, a steel deck, low down in the vessel in the neighbourhood of the neutral axis, might tend to reduce the shearing stresses on the adjacent shell plating. It will be seen that such an addition of material will have practically no effect at all on the shearing stresses, and might even increase them slightly, viz., where the addition made to the moment (m) is relatively larger than that made to the moment of inertia (I). Such a tier of beams would, indeed, reduce the stresses on the edge riveting by reducing the stresses due to panting, but as these stresses constitute only a small part of the total stress, it follows that the method would be both inefficient and uneconomical. The only satisfactory method of reducing the stresses is by increased rivet attachment.

From the above general considerations of the stresses on the edge attachments of the shell plating, it was seen that they would be at a maximum in the fore and after bodies of the vessel, say, within the oval areas indicated in Fig. 9. It is, therefore, at these places that trouble should be expected first as the size of vessels increases. Experience has amply proved that such is the case. In a considerable number of instances of large cargo vessels which have shown signs of straining at the edge attachments, it was found that the rivets affected were distinctly within such oval

areas as indicated in Fig. 9, and increased in number as the middle of the ovals were approached. In some of the vessels the rivets were found to be strained on opposite sides of the vessel in the fore and after bodies, as at A and B, Fig. 9; say, on the starboard side forward, and on the port side aft, and no straining was apparent on the port side forward or the starboard side aft. This was thought to point to the conclusion that the shearing stresses were not the cause of the straining. A little consideration will, however, show that it is, on the contrary, strong evidence, if not actual proof, of the shearing stresses being the cause of the mischief. The most severe stresses are evidently experienced when the vessel is encountering a heavy gale. The chances of the course of the vessel being square to the course of the seas are naturally small. In most cases the waves will strike the vessel on one bow or the other. When a ship is thus crossing the seas obliquely, there will be a tendency to twist the fore and after bodies in opposite directions, due to the unequal distribution of buoyancy or support on the two sides. This twisting action will be added to the hogging or sagging tendencies with the consequent shearing stresses. The twisting stresses are pure shearing stresses, and it so happens that both when the vessel is hogging on the crest of a wave and when sagging in the trough, the twisting tendencies not only increase the shearing stresses on the one side, but actually reduce them on the opposite side of the vessel. During the whole time of a gale on one bow or the other, the shearing stresses would continually be increased on one side and reduced on the other side in the fore body, and reduced and increased respectively on the same sides in the after body. It is, therefore, natural to expect that the straining effects due to the shearing forces should, in many cases, appear on opposite sides in the fore and after bodies of the vessel. In one of the vessels above mentioned the waves had, undoubtedly, been encountered on the starboard side because the striking seas had, besides straining the rivets in the way expected, given the rudder stock a permanent twist to port.

The straining effects have been experienced in cargo vessels of 470 feet in length, and the fact that large passenger vessels of considerable greater length have not been affected is probably due to the smaller displacement in proportion to the length, and to the finer form, which would tend to reduce the shearing stresses due to pitching. On the other hand, special circumstances may tend to strain the edge riveting in much smaller vessels. In a recent case a vessel of 450 feet was thus reported to be leaking in the forward hold, and the riveting of the edges was found to be strained. The cause of the straining looked somewhat obscure until it was made clear that on the previous voyage the vessel had been crossing the Atlantic light, with a small draught forward, while having a very large amount of water ballast in the fore peak. The enormous momentum of the fore end of the vessel had, when suddenly checked by the impact of the seas on the bottom, strained the rivets in the edges of the plating, but the straining being above water no leakage occurred until the vessel was again fully loaded and experienced heavy weather during the return voyage.

In some instances the rivets have been found strained in the edges of the plating in the flat of the bottom near lapped butts as at A, Fig. 2. It will be evident that the bending or joggling of the plate makes it less efficient for the transmission of direct stresses. Part of the stresses will therefore pass to the adjacent plates, and will do so mainly through the few rivets in the edges at A and A, which may therefore be unduly strained. The shorter the bend of the plate at A is, the greater the stresses on the rivets will be.

It is usually found that strained rivets occur in patches here and there, and it has often been the case that if the affected rivets were renewed then there was no more trouble. There are several reasons why this should be so. It is impossible to ensure absolute uniformity in the riveting throughout a vessel. There will always be some rivets laid less efficiently up than others, and some may be strained in the operation of building the ship,

and these stresses may remain after the vessel is completed. When there is a general increase in the ordinary stresses in the riveting, it is to be expected that the rivets, which have already a tendency to strain, should be the first to show signs of weakness. Up to certain sizes of vessels it may therefore be expected that when such affected rivets have once been renewed there will be no more straining at that place. The stresses due to building operations will naturally be greatest in new vessels, and may gradually disappear. It is no doubt these stresses the Scotch engineer, in the Kipling tale of "the ship that found herself," had in his mind when he said of the ship: "Every inch of her, ye'll understand, has to be livened up and made to work wi' its neighbour—sweetenin' her, we call it, technically. For a ship, ye'll obsairve, Miss Frazier, is in no sense a rigid body closed at both ends. She's a highly complex structure o' various and conflictin' strains, wi' tissues that must give an' tak' accordin' to her personal modulus of elasteesity."

It may really be considered fortunate that there are rivets with a greater tendency to strain than others, because they serve the purpose of danger signals, and may show by their increased frequency, when strained, that the main stresses are getting too high.

Conclusions.

It would appear that the stresses on the edge riveting are, other things being equal, being rapidly increased with the increase in size of vessels, particularly in the case of the full displacement type. These stresses have, moreover, been increased by the tendency to let full-formed vessels of great size proceed to sea in light or comparatively light conditions, particularly where water ballast has been added in such a way that it increased the force acting on the structure.

Practically, the only way of reducing the stresses is by increased rivet area. In some cases this may be obtained by closing up the spacing of the rivets, but eventually, as the size of the vessel increases, it must be obtained by the fitting of an additional row of rivets.

Discussion.

Prof. J. H. Biles, LL.D. (Vice-President), said he had read this paper with some amount of care and interest. It was a valuable paper, and one which put in a concrete form what a great many persons had been thinking about in connection with this subject of stresses upon large ships. Substantially, the proposals in the paper resolved themselves into putting within a certain limited area an increased number of rivets in the landings of the outside plating. What Dr. Bruhn had shown was that the maximum shearing stress came upon ships at points situated about a quarter of the length of the ship from the stem, and a quarter of the length of the ship from the stern respectively, and somewhat in the vicinity of the neutral axis, at about half the depth of the ship. These shearing stresses which were transmitted from layer to layer of the plating, had to be transmitted from plate to plate through the rivets that connected the landings of the plates, and he had shown that the stresses that came upon those rivets were great in large ships. The method proposed to reduce the stresses was the very obvious one of increasing the number of rivets. He thought every one would agree with Dr. Bruhn as to the cause of excessive stress upon rivets. If the stress was more than the rivets could stand, that was a method of reinforcing those rivets. He further showed that if the frames in the vicinity of the parts mentioned yielded to an amount which was not unreasonable to suppose they might yield, a further stress was brought upon those rivets, and the two stresses combined made the stress upon the rivets excessive. The first part of the paper, he thought, they were all agreed upon. As to the second part, they would require a little more evidence than they had at present. Dr. Bruhn's evidence was that ships showed signs of distress in the rivets in these particular parts, and therefore the shearing stress which came upon them due to the maximum shearing force being in that locality was not sufficient to account for the distress, and some other cause must be found. Dr. Bruhn

assigned as a cause the yielding of the framing, and suggested as a remedy that the number of rivets should be increased. It was obvious, in the first place, that if the yielding of the framing was a cause, perhaps it might be as well rather to prevent the cause of the difficulty than to reinforce the vessel against the difficulty after it had arisen. Therefore, he was not at all sure that Dr. Bruhn's statement should be accepted, viz., that the transverse framing was weak enough to make the difference between successfully resisting the rivet stress and unsuccessfully resisting it. On the other hand he was bound to say that he had had some experience of difficulties in the particular localities mentioned, and had already adopted in large-sized ships the precaution of a treble row of rivets as suggested by Dr. Bruhn. He was also bound to say that it had not always been successful, and that led him to the consideration of other causes, and amongst the other causes was one that was obvious to anyone who looked into the question of slack rivets. It was that slack rivets might be possibly due to workmanship which, although of a fair average class, was not of the highest character, but of a stamp which one might expect to find in parts of the structure, even in the best shipyards. He thought that the investigation which Dr. Bruhn had made was an exceedingly satisfactory one. It was one that while perhaps it might be a little difficult for some people to follow closely, would repay any one who took the trouble to read it through. It was an elucidation of the present position of stress and strain in ships, and in parts to which, until recently, they had not been in the habit of devoting so much attention to as they had in others.

Mr Foster King (Member) considered that Dr. Bruhn's paper was one which deserved the utmost attention on the part of all concerned with fixing the scantlings of vessels, and he would like to take this opportunity of expressing the pleasure with which he had read the paper, and his admiration for the way in which Dr. Bruhn had epitomised, in simple and easily grasped formulæ, general results which could only be obtained otherwise by means of complicated calculations. The preliminary part of the paper,

which dealt with butt rivets and their strength in proportion to the plates they connected, referred only to the familiar fact that the rivet area must increase in proportion to the thickness of the plate, in order to avoid excessive interruptions in longitudinal strength, and did not appear to have any very direct bearing upon the stresses on edge riveting, which formed the main object of Dr. Bruhn's investigation. Dr. Bruhn, in dealing with theoretical stresses upon rivets in fore and aft seams, apparently based his chief argument upon the assumption that the stress upon the gunwale obtained from the ordinary calculation (which assumed a ship as being poised for an instant on the crest of a wave) was a quantitative stress which increased with the length of the ship. He made the further assumption that the increasing longitudinal stress thus found might naturally be accepted as a measure of the stresses upon the transverse material. Dr. Bruhn's figures were, probably, sufficiently correct generalisations upon these assumptions, but he thought that before they were accepted as definite guides to future ship construction, it would be well to be certain that they were reasonably well founded. Dealing with the first and principal assumption, he thought that it was usual to consider the stresses obtained from the ordinary wave crest calculations as a valuable means of comparing the strength of vessels of the same length, but not to accept them as definite measures of actual stress upon the gunwale. He questioned the probability of any one commencing to build a ship with scantlings which one really believed would be subjected to the dynamic stress that would correspond with a calculated static stress of 10 tons per square inch. During his own experience the ordinary tramp steamer had increased from 260 or 270 feet to 400 feet, and the average big boat from 400 to 600 feet, and he thought he was right in saying that during that period of evolution, ship repairers and surveyors had found occasional evidence of longitudinal straining in vessels of all sizes, which seemed to show that the factor of safety in the smaller vessels did not greatly differ from that in large ships. In other words, experience seemed to point

to an assumption that all well designed vessels above, say, 300 feet in length were subject in practice to fairly uniform longitudinal stresses. With regard to the second assumption that the stresses upon the transverse material might be taken as ascending at the same rate as the theoretical stresses upon the gunwale, one would rather expect the designer in fixing scantlings to aim at uniformity in strength, having regard to the dimensions of the vessel and the numbers of tiers of beams which supported the framing, and would not expect such apparent absence of guiding principle as followed from Dr. Bruhn's theory, and as would seem to be indicated by some of the figures in Table 4. Even if one admitted that the comparative stresses actually increased in the way shown by Dr. Bruhn, he would point out that on his own figures there was nothing very alarming in the results, as, a mean of the curves on Fig. 6, for the stresses upon the edge riveting due to the combined shearing forces, did not show any marked disproportion at the upper end from those upon the longitudinal material, as shown in Fig. 4, that was to say, their relationship differed little from the just proportion between shearing and longitudinal strength given by Dr. Bruhn, so that the factor of safety should be approximately similar in each case. Looking at the question from a practical point of view it was difficult to understand how a sliding movement on the edges of the landings could take effect without shearing the frame rivets, or why, if the plating carried along with it all the girders and inside stringers, the connections were not sheared at such rigid points as the bulkheads. He had given a good deal of consideration to the point, but failed to see how a frame formed, say of, $9'' \times 4'' \times 4'' \times 15/20''$ channel, could deflect between rivets $6\frac{3}{4}$ inches apart, and, as he might possibly have misunderstood Dr. Bruhn's meaning, he would be glad if the author would explain a little more fully his reference to the flexibility of the frame between any two rivets. Dr. Bruhn instanced the case of a vessel running in ballast in proof of his theory, but if displacement was accepted as the measure of shearing stresses, should they not in this case have been

comparatively small, even after making allowance for the effect of the water ballast forward in increasing the bending moment? It would be noted, in this connection, that Dr. Bruhn attributed the comparative immunity of large passenger vessels to their relatively small displacement. He thought, however, that it would be a dangerous thing to assume that because a vessel was fine, therefore the longitudinal stresses and the corresponding shearing stresses were relatively small. He knew that the late Professor Jenkins once investigated the effect upon a normal model, of filling out and fining down the lines, and found that taking account of the virtual water pressure, the fine vessel would be subjected to more severe stresses than the full vessel under similar conditions. If the dynamic effects of relatively high speed in heavy weather were also taken into account, then the immunity of these large passenger vessels would seem rather to form arguments against Dr. Bruhn's theories. He, personally, had no experience which would lead him to attribute defects in edge riveting directly to longitudinal shearing stresses, because in cases of this nature, although such defects were often accepted in advance, as evidence of the vessel going to pieces, they were usually found upon enquiry to have arisen from external and preventable causes. He would suggest, in regard to the general question, that the defects under discussion might be entirely due to the mechanical effect of panting, and would direct attention to the fact that the zones on Fig. 9 corresponded to the parts of the vessel where the unsupported length of frame was usually at its maximum. In most other instances they were probably the result of bad workmanship, or failure on the part of masters to understand that the modern 10,000 ton steamer received damage from a graze on a dock wall which would not affect a small vessel. He remembered a paper read by Herr Schlick, at the Berlin meeting of Naval Architects, dealing with defects which developed in the machinery space of oil tank steamers. It seemed that experience could foretell that at a certain period, and in about the critical position indicated in the paper, a certain

shell plate would break. Herr Schlick attributed this result to shearing forces, but in the discussion which followed, such authorities as Mr Martell and Sir William White gave it as their opinion that these defects were, probably, not due to shearing but to panting. It was the present custom to build large cargo steamers with two decks and very deep holds, and it was quite a common thing to have frames from 20 to 26 feet in length in the fore hold, so that one could understand that even with a perfectly safe stress there might be an actual movement on the frame which would be a matter, not of decimals, but of something represented by an inch or inches; movement which would, undoubtedly, result in failure in the edge riveting if the precaution of adding webs or beams were not taken. In support of the view that panting would produce the results described by Dr. Bruhn, he would adduce the evidence of two cases which had come under his observation, both in vessels of considerable size. In the first instance, defective seam riveting revealed itself where Dr. Bruhn suggested that it might be expected, but in this case it was clear that the trouble had been caused by panting, the beam knees having been started, while the panting stringer gave undeniable evidence of deflection having occurred between the points of support. In the second case the steamer, when fully laden, was reported to be leaking badly during bad weather. It was found necessary, when abroad, to re-rivet a considerable amount of the edge riveting at about the quarter length and just under the lower deck, in the very neighbourhood of the maximum shearing stresses. On being docked in this country, it was found that the frames over a large area were set in to the extent of about an inch. Enquiry revealed the fact that on the day before sailing outward, the vessel had been heavily squeezed against the quay wall by another large vessel, thus unwittingly carrying out an experiment which proved that framing may be subjected to large bending moments without disturbing the frame rivets, but which would cause serious damage to the shell seams. But for the accident of the deflection in the frames

having been so great as to produce permanent set, this vessel would have been, and was for a time, regarded as affording proof of serious straining due to shearing forces, because, from the nature of the accident, there was very little external evidence of collision. He would take leave to urge, therefore, that before accepting the conclusions which Dr. Bruhn seemed to consider as proved, they should at least be well weighed, and that more data should be available as to the symptoms on which the diagnosis was founded, before his remedy was accepted.

Mr ROBERT T. NAPIER (Member) said that the question referred to by the author, as to how much a butt joint was supported by the solid plates in way of it, was an important one. A butt joint, as usually fitted, with $3\frac{1}{2}$ diameters pitch of rivets had, through the line of holes, barely 70 per cent. of the sectional area of the plate, while the section through the line of beam and frame rivets, with 7 diameters pitch, was nearly 85 per cent. He was not experienced in ship-repairing, but understood that signs of strain at the gunwale usually showed first at the plate butts; pointing to something between 70 per cent. and 85 per cent. as the effective section. With steel rivets limited to one-inch diameter, this could never be otherwise. He asked if any ships were building on the Clyde, as they were at Belfast, with heavy rivets closed by power. Boiler-makers got 85 per cent. of the strength of the plate through their shell butts.

Mr JOHN WARD (Member of Council) like the previous speakers, was exceedingly grateful to Dr Bruhn for the able paper which he had brought before the Institution. Dr. Bruhn, in his capacity of chief scientific investigator to Lloyd's Register had had this subject before him for some time, and he had worked at the paper with the full knowledge that a very considerable amount of stress and strain had been in evidence in large steamers during the last two years. At the meeting of the General Technical Committee of Lloyd's, three weeks ago, he, Mr Ward, suggested that as Dr. Bruhn had written the paper for this Institution, it would be wise to await the discussion on the same

Mr John Ward.
before taking legislative action upon it. The Technical Committee thought differently, and decided that, in future, the proposals expressed in the paper by Dr. Bruhn, for large steamers, should be carried out. He agreed with Professor Biles in stating that while Dr. Bruhn's theoretical investigation was correct, he did not think his conclusions were equally so. Dr. Bruhn, on page 79, seemed to give himself away, because he said there, "It is usually found that strained rivets occur in patches here and there, and it has often been found the case that if the affected rivets were renewed then there was no more trouble." It seemed to him that if the same number of rivets simply replaced by thorough workmanship effected a cure, then the cause of the disease and the remedy were apparent. Even larger steamers than those Dr. Bruhn spoke about had been running in the North Atlantic for years, and showed no symptoms such as Dr. Bruhn described, and for which the additional riveting was proposed. Professor Biles stated that in some cases he had taken the precaution of adding a treble row of rivets, on the principle that it could do no harm, and possibly might do a great deal of good, and might do it, also, with the least expenditure of extra weight. Whether that was the right and only way of looking at it, he was not prepared to say.

Mr J. R. Jack (Member) observed that the paper might be divided into two parts, the one purely theoretical, which was worthy of the highest praise, and the other practical, which was not quite so admirable. The distribution of the shearing stresses had been first worked out by the late Professor Jenkins, and it must be a pleasure to all who had had the privilege of studying naval architecture under him to see the work that he began so well carried a step further; but when one came to consider the question of absolute values, he thought therein Dr. Bruhn was not quite so successful. The strength of the solid plate was not the criterion by which the strength of a longitudinal joint should be judged. The strength of the plating in way of the frame rivet holes was the standard, or should be the standard, by which to compare the

strength of the butt connections. Taking the matter apart from this, the figures given by Dr. Bruhn for the shearing force acting on the vessel seemed to him to be much too great. The figures were worked out on the assumption that the buoyancy of every cubic foot of the wave was the same, while according to the trochoidal theory of wave structure the stress would be very much less. That was quite recognised in considering the tensile and compressive stresses on the gunwale due to the bending moment, and it should also be recognised in dealing with the shearing forces. It was just in those large vessels with deep draught that that would have the greatest effect. The other item which Dr. Bruhn had added was the stress caused by the bending of the frames due to the deflection of the ship's side inwards, and it seemed to him that the assumption made there was altogether indefensible. By the method of calculation used in the paper, if the strength of the framing were doubled the stress on the rivets would be doubled, and by continually increasing the strength of the framing the stress on the rivets would also increase so that ultimately the rivets would break, apart from the stress due to difference of bending moment. Even if it were taken that the stress on the rivets did not increase as the strength of the framing was increased, the assumption was made in the paper that the amount of material in a vessel classed at Lloyd's was just sufficient to take up the transverse straining forces. He did not think that any shipbuilder having had experience of ships other than those classed at Lloyd's would be prepared to grant this. It was known that in vessels built to British Corporation rules the framing was somewhat lighter than Lloyd's and in many vessels which had been built and not classed at all, the framing was still less, and these vessels were showing no signs of distress in the riveting although they had been working for many years under very unfavourable conditions. Dr. Bruhn made a very excellent remark on page 67.—"There can thus be no necessity for having the same proportionate rivet strength at the ends of the vessel as amidships, and there would appear to be no good

Mr J. R. Jack.

reason why the butt attachments at the ends should be stronger than the edge attachments, or why the edge attachments should be weaker than those of the butts"—which he considered pointed to the advisability of dropping the practice of treble riveting the butts at the ends of large ships. A vessel very similar to the 450 feet vessel referred to by Dr. Bruhn had come under his own notice recently, and the slackness in the rivets showed itself almost exactly in the same place, but on investigation it was found that the cause was quite different. The vessel had been passed through a dock entrance only about 2 feet 9 inches wider than the ship herself, and she had been "assisted" in her passage by cork fenders. Any one who had seen a ship moved along a wharf, when cork fenders had been employed to keep her off the wharf, could not fail to be struck with the severe treatment which the shell plating received when the fender got between the frames. For this very reason a number of shipowners would not allow cork fenders in their vessels. Dr. Bruhn pointed out that the estimated stresses were "entirely relative," on which he thought they would all agree, but what must be questioned was the absolute values which appeared to be put upon those stresses. There was no doubt, however, that if the stresses *were* due to weakness the increased number of rivets was the only proper cure for that. If one vessel 600 feet long was found not having treble riveted landings and which had met ordinary sea conditions for a number of years without distress, it was proof positive that any number of vessels could be built capable of doing the same thing. There was a ship built many years ago, much longer than 600 feet, which had not treble, or even double, riveted landings, and that was the "Great Eastern," and he had never heard that she showed any sign of weakness about the landings. The shell was secured by one row of $\frac{7}{8}$ inch rivets, and if that could be done then, it could be done again. The work was good, but they should be able to do good work now. She had a double skin, and, perhaps, that was equivalent to an additional row of rivets, but even so, there was a ship 680 feet long with the equivalent of only two rows.

of rivets which took up the shearing forces satisfactorily. The quality of the workmanship and the material was, in his opinion, at the bottom of the whole thing.

Mr A. S. Biggart (Member) felt that there were many points of similarity between such work and the structural work with which he was usually connected. Most people were surprised at the large stresses naval architects put upon the structure of a ship, and this surprise was increased when the comparatively poor class of work in the ship was borne in mind. It became a question if it would not pay the shipowner to spend something extra in drilling the holes in the more important parts, and afterwards to fill in the special rivets by power. In many bridge structures, it had been found that vibration was one of the most serious deteriorating influences, and he imagined that in ships this same influence had a similar effect, and was probably responsible, to a considerable extent, for the slackening of the joints and rivets. The plater was fully aware of the value of vibration in assisting to send home plates and other parts, and used effectively the forehammer for this purpose. It looked as if in such cases there were waves of relief due to vibration, taken advantage of as in the case referred to, and which had a deteriorating influence in such structures as ships and railway bridges. In the course of business his firm had cut many bridges to pieces, and, as a rule, it was found that those which had required most repair were structures that had been punched and the work generally of an inferior class. On the other hand, bridges well made, having the holes drilled, and the riveting done by hydraulic power, were as good as they were when first erected, and in most cases required no repair during their whole life. In his opinion, many of the weak parts in ships were largely due to poor workmanship, and if a much higher class of work was adopted, many of the difficulties complained of in the paper would probably be solved.

Mr A. Denny (Vice-President) thought the profession owed Dr. Bruhn great thanks for his paper. Whether his practical conclusions were agreed with or not, he had at least directed

Mr A. Denny.
attention more specifically than it had been directed hitherto to parts of a ship which required consideration. He was perfectly frank in admitting that he had had to make a great many assumptions, and that he had no definite ground for believing these assumptions to be correct, except that practice seemed to bear out his scientific conclusions. He did not know that one could have any better proof of the accuracy of a scientific investigation than, that practice showed weakness where it had been anticipated by calculation; but in this case, he thought, the weakness had shown itself first, and then Dr. Bruhn was called upon to give a scientific reason. This was not quite the same thing, and what Mr Jack said, he thought was true, that if he came forward with one or more instances of vessels considerably larger than he believed this addition was to be applied to, namely, 480 feet—which had been successful—then they should look somewhere else for the explanation of the weakness which had been found. It was practically impossible to fully criticise Dr. Bruhn's paper without having before one, not only the final figures, but the scantlings and details of work from which these figures were derived, and it must not be forgotten that Dr. Bruhn was dealing with only one set of rules, and probably an extension of these rules. He thought Mr Biggart and Professor Biles had probably put their finger upon the spot, when they said that workmanship had a great deal to do with it. In these large vessels where the rivets in the landings were, probably, one inch in diameter, it was not every squad which could satisfactorily lay up one-inch rivets, nor could even the best squad keep on laying them up properly for any great length of time. Again, the vessels in which weakness had been found were, no doubt, those constructed during the recent busy time when workmen were not only difficult to get, but difficult to keep. Once a fortnight also, many of those men were in the habit of being somewhat too good to themselves, and for some days afterwards no doubt the riveting was hardly so good as the builders wished it had been. In any case it was probably not so good as Mr Biggart would like to see put into his bridges.

Mr Jack had rather got ahead of him in giving as an instance the "Great Eastern," but there were many other large ships about which he had never heard any complaints, ships of 480 feet, and also very considerably greater, some of which had been built by his firm. He also knew many much smaller vessels which were running with single riveted landings at this part. The "Ireland" had only single riveted landings at the point indicated by Dr. Bruhn, and she could hardly be called a small vessel. He thought he was right in saying that Mr Holt had, until quite recent years, built steamers of considerable size with single riveted landings, and perhaps no one was freer from trouble or more successful than Mr Holt. Like his partner, Mr Ward, he regretted that additional material should be piled on to vessels, and that shipowners should be made anxious in thinking that they were neglecting something if not piling on material. He thought it would be far better to look deeper and find if they could not improve the design of their vessels, and make very sure of the workmanship. It might be well to adopt a higher tensile steel and to use only steel riveting. The use of steel rivets had been the practice of his firm for many years, even in small vessels; perhaps his firm had carried this to an extreme, but it might be that a return to this practice in larger vessels would prove advantageous. With regard to panting, Dr. Bruhn, by his figures and on his assumptions, showed that panting was a very small proportion of the gross stress, but he thought that the practice of building these large vessels with so few decks had probably something to do with this weakness which had been detected. He thought it might be found desirable to so rearrange the transverse strength as to augment it considerably at these points, support the plating better, and keep it better to its work, because panting was just what Mr Biggart talked of as a species of vibration, and nothing told sooner upon riveting than panting. The rivets were jarred loose in the holes, and this did away with all the benefit of the "sticktion" of the plates due to good riveting. He was sorry to think they were having additional material added

Mr A. Denny.
to vessels which he was perfectly certain did not require it. A steamer, 480 feet long, was built by his firm, and Professor Biles was consulting naval architect for that vessel, which had scantlings somewhat lighter than was then the rule. That vessel had been trading now for some years and showed no signs of slackness of the rivets in the region indicated by Dr. Bruhn. She had shown signs of panting at the fore end, but on investigation it was found that what Mr King had said was quite true that, if one looked carefully into the matter he would frequently find the trouble which was at first diagnosed as weakness arose from external causes. This vessel had been aground, not once, but several times. He would conclude as he began, by saying it was good to have a man like Dr. Bruhn engaged in this work, directing attention to those parts of the vessel which required care in designing and arrangement of material. It had been the custom, rather to look to the extreme ends of the vessel, but Dr. Bruhn had pointed out another place which they would also require to watch, not only in design, but also, in what he considered of equal importance, good workmanship.

The PRESIDENT said this seemed to him a subject of very great importance, a subject upon which a great number of the members would like to say something, and he would suggest that the discussion might remain open till the next meeting, when possibly Dr. Bruhn might attend and express his ideas. At the same time, they might also hear a little more about what seemed, after all, to be according to the general opinion of shipbuilders, the real source of weakness which seemed to be the hand riveting. They might also at the next meeting hear something about the possibility of using either hydraulic or pneumatic riveting, and getting over a great many of the difficulties of which they had heard.

Mr H. HAND (Member) observed that at the last meeting several of the speakers attributed the failure of the riveting, to a large extent, to bad workmanship. He did not altogether agree with that, as seldom were any defective rivets seen in vessels engaged

solely in the Eastern trade, and the workmanship in them was no better than in other boats. It made a considerable difference to the riveting of a vessel as to when she first started her career. A vessel starting at the beginning of the winter months was never such a successful boat, as far as the riveting was concerned, as a vessel that started at the early part of the summer; for the latter had got settled down to her work, and had been dry docked, before the winter commenced. He thought it would be beneficial in large steamers if the frames, as in the fore and after bodies, had a double connection to the shell, by fitting a back angle to the frame. It would not be necessary to carry the double frame right to the top, but to say about half the depth of the vessel, as it was principally the frame rivets in the shell that gave trouble at the ends of vessels. At this port one had little or no experience of the defects in the seam riveting as shown by Fig. 9, for steamers of 500 feet in length and upwards were dry docked elsewhere. He did not agree with Mr King that the defects in the seams at these parts were caused by panting, as the same peculiarity in deck plating was seen when it gave out at the corners of hatchways; the fractures being on the opposite sides in the fore and after bodies respectively, which was no doubt due to a racking strain. The older types of Atlantic vessels which were dry docked at this port and gave the least trouble with the riveting, were those built on the edge to edge system, and he believed the outside covering plates over the seams were treble riveted.

Mr JOHN REID (Member) said he was sorry he had not been present when Dr. Bruhn's paper was read, but Mr Parker had asked him to take part in the discussion that evening, and he had the greatest pleasure in doing so, the more so as Dr. Bruhn and himself were old friends, and had worked under the late Professor Jenkins on the subject of the stresses on ships. He thought that no matter of more clamant importance could be brought before the Institution than this question of riveting. It concerned not only shipbuilders, but a very large body of shipowners, especially those engaged in the North Atlantic trade. If a ship were sent out

Mr John Reid.
to the westward in ballast, and on the return trip it was found that cargo could not be carried in some of the holds owing to leaky seams and rivets, then there was likely to be trouble all round. If the shipbuilder was within hearing he would participate in it, and doubtless the responsible registration society would also get a share. No doubt, therefore, there had been a searching investigation of the subject at headquarters in London, and Dr. Bruhn's paper was possibly the result. He could not go into the mathematics of the subject, but he thought that some of the practical suggestions Dr. Bruhn brought forward were extremely interesting. The importance of the shearing stresses was a point which he thought ought to be emphasized. Dr. Bruhn had taken the trouble of showing how excessive was the shear at certain parts. Shearing was not always thought of in the same way as were compression and tensile stresses. It was not quite such a simple matter, but it certainly must play a very large part in the riveting trouble. Some of the members in their remarks had differentiated between panting and shearing stresses, but he thought they ran very closely together. These stresses were quite different in nature, of course, but they could not be dissociated. A panting stress of any kind introduced in the plating near the panting stress, a considerable shearing stress. He thought that should be carefully noted. There could not be a panting stress at any place without a shearing stress following it in the neighbouring landings. If one took a couple of laths laid side by side to represent a landing, and put a panting stress on these laths, a sliding movement would be seen taking place which was simply a shear between the laths. That seemed to have been forgotten. It was extremely important to notice, as Dr. Bruhn stated, that the shearing stress very often took place across the landings. He thought on the whole that panting was the cause of as much of the trouble as any other stress on the ship. In fact, to him, it seemed to be the worst form of stress as far as the rivets were concerned. There was always a vibratory motion going on, and the rivets got jammed and

shaken loose, and it was little wonder they did so. With regard to Dr. Bruhn's remedy for this trouble—a third row of rivets—he thought it was a very natural result of his calculations and a very natural way of getting rid of the difficulty. Some members seemed to have objected to the putting in of more material, but really, after all, the added material was not great; it was only over a local area that a third row of rivets was proposed to be used. If shipbuilders did not do something to get rid of this trouble, then they would have shipowners taking the matter into their own hands and putting in material by the hundred tons. He could mention a case very much in point. Certain shipowners in this city were so determined to get a ship for the Atlantic trade that would give no trouble, that they reserved to themselves the right in the specification to add one hundred tons of material above classification requirements, about two per cent. of the whole material of the ship. Representations were made to them that it was spending a lot of money and using material for no good purpose, but they insisted upon it. Of course, the money for this came out of the shipowners' pockets, and it did not therefore concern the builders very much. He did not think, in this connection, that reference to the "Great Eastern" or the "Ireland" was of much value, as they were old boats. The "Great Eastern" was built half a century ago, and had a double skin with heavy longitudinal framing which would certainly reduce the shearing stresses on the landings. The "Ireland" was also a very old boat.

Mr DENNY—No, no.

Mr REID—There might have been a new "Ireland" since, but he referred to the old "Ireland," which was a fine-lined paddle channel-steamer. Mention had been made of Mr Holt's boats; but one should not take Mr Holt very seriously. He had a good many peculiar ideas. It was his custom formerly to drive his vessels with single-cylinder engines equipped with a large fly-wheel. It would not be wise to infer from that that triple expansion engines should not be used at the present day. They did

Mr John Reid.
not pretend to follow him in that or in other matters. As regarded workmanship, he certainly thought that in a large number of cases it was to blame for a considerable amount of trouble. He did not mean to attribute to bad workmanship the fact that defective riveting always existed about the same place. That might be due to the excessive shear at those places, as Dr Bruhn had pointed out. There was no question that the riveting to-day was not as good as it was perhaps ten years ago. With the increase in the size of rivets there had been a marked falling off in the class of men who had to lay them up. When a ship was put into dock after one or two trips and had four or five thousand rivets taken out of her holds, there was evidently bad workmanship. It might not be bad riveting alone but bad plating had to go along with it, and the effect was assimilative. That was not by any means an unusual proceeding in dealing with ships that had been built in very high class yards. It used to be customary for Clyde men to go to Southampton to make good American work, but just recently American men had been in Southampton to show up Clyde work and put it right. That was because they knew how to handle mechanical riveters. The President had raised the question of the use of mechanical means of riveting. He thought that a great deal of assistance could be given to the rivets if they were set up by some mechanical means. He had had an opportunity quite recently of seeing what was being done in America in that matter, and there pneumatic tools were used everywhere. The holes were very carefully cleaned out, and the rivets were laid up by pneumatic hammers of different sizes. They could lay up anything to a $1\frac{1}{4}$-inch rivet, and were not afraid to do it either, even in a protective deck where the rivet was a special heavy one. On the Lakes a rivet was hardly ever put in by hand, mechanical appliances were used. He was rather surprised that Dr. Bruhn had quoted from Rudyard Kipling. He had verified the quotation for himself, and he thought that while Rudyard Kipling had acquired a wonderful amount of information about stress and strains in ships, some of his ideas

Mr John Reid.

concerning naval architecture were rather rickety. He mentioned a ship 240 feet in length by 20 feet beam, with a main deck for sheep, an upper deck for cattle, and a well deck with high bulwarks. He gave her 2000 tons register, which would get the builder into serious trouble with the owner, and he put 4000 tons of cargo into her, which would probably strain every plate, frame, and rivet in a way the builder had never anticipated.

Mr Benson Taylor (Member) thought Dr. Bruhn's paper was one of the most interesting to naval architects that had been submitted to the Institution for some time. Mr Biggart, in his remarks, had given his opinion upon the quality of workmanship and riveting in the upper works of large steamers, and seemed to be of the opinion that a ship was a very inferior structure to a bridge girder. In association with this inferiority, it would be of interest to have Mr Biggart's opinion on the likelihood of a large vessel doing her work satisfactorily, when the upper works were being subjected to intermittent stresses of 10 tons tension and say 8 tons compression per square inch when crossing a series of waves at sea; 10 tons, even in a new vessel, only permitted a factor of safety of 2·8, and this factor would be still further reduced if pitching were taken into account. Dr. Bruhn possibly regarded his figures as purely relative, but then he appeared to found results upon them which suggested that he took the calculated stresses as being actual. With reference to the formula which dealt with the shearing stresses in the rivets connecting the frames to the shell, due to the bending inward of the frames, it seemed to him a curious use to make of the longitudinal bending moments or stresses to find those upon the framing, when the essential difference in the work the frames had to do in supporting actual water pressure loads, etc., were considered. For instance, if two vessels were taken of the same depth and breadth, but differing in length, Dr. Bruhn's formula would show that in the longer vessel the shearing stresses in the frame rivets would be greater than those in the shorter vessel, and for no other reason than that the long vessel had a higher tensile stress in the gun-

wale. There was no obvious difference in the transverse work that these vessels had to do, and it appeared if that formula of Dr. Bruhn's were adopted as sound, then builders should logically make the size of the frames depend on the length of the vessel. In examining Fig. 7, he found that the stress in the frame rivets of a vessel 350 feet long was about 7 tons or probably 8 tons if the so called accidental increase of stress due to the additional strength of an added reverse angle were taken into account, and was nearly as great as the combined shearing stresses in the seam rivets of a vessel 700 feet long. If Dr. Bruhn discredited the stresses in the frame rivets upon occasion, as being probably less than shown by calculation or the diagram—in some cases they were obviously much less—it was apparent that too much reliance should not be placed upon the figure values of those in the seam rivets which were based upon them to some extent, as well as directly upon the theoretically longitudinal stress. Dr. Bruhn referred to the weakness of a frame in a fore and aft direction, and its tendency to bend between the rivets connecting it to the shell. It was hardly conceivable that such movement could occur in so short a distance, but the full effective value of the frame as a cross tie to the plating in the affected zones, could surely be obtained by closing the pitch of frame rivets and by putting in two rivets instead of one in the landings. The two examples of failure of seam riveting given by Dr. Bruhn were associated with extraordinary conditions of weather, and the vessels were subjected to heavy seas striking their sides; in one of the cases mentioned the rudder stock had received a permanent twist. He thought that it was just as desirable to increase the rudder stocks as to ask for extra riveting upon such evidence. Mr Jack referred to cork fenders, and suggested that they should be excluded from the equipment of large steamers. He would go further and say that it ought to be regarded as a criminal offence for ships' officers to allow spar fenders to look after themselves when the vessel was lying alongside a wharf and influenced by rise and fall of tide. It was not an uncommon

thing to see these unyielding fenders hanging almost vertical and exerting pressure on the plating between the frames, and that too as often as not at the quarter length. This mischievious practice caused leaky patches in the seams, which were seldom discovered at the time, and were frequently attributed to straining at sea, even though in many cases there was external evidence of the true cause. Some shipowners attached so much importance to this question that they were replacing the spar fenders by long wicker fenders. In regard to stresses in association with abnormal bending moment, he would like to mention a case which occurred some years ago, and which did not seem to bear out the shearing force theories. He was associated with the repairing of a vessel which had grounded upon a sand-bank. The vessel was so severely strained that the sheerstrakes were broken, and the deck butts disturbed amidships. Literally, the vessel's back was broken, and before removing her from the bank it was considered necessary to provide temporary support to the upper works by erecting derrick posts as struts to fore and aft wire stays. That vessel was repaired by the renewal of the broken plates and other damaged material amidships, and it was not found necessary to touch the riveting in the seams of the shell plates at the parts where the maximum shearing stresses took effect. Turning to Fig. 4, he noticed the stress in the gunwale (for 300 feet, which was about the length of the vessel referred to) was about 7 tons for wave crest condition, and corresponding to this, on Fig. 6, the shearing stress in the seam rivets was about 3 tons. Seven tons multiplied by four gave 28 tons as a breaking stress; and the shearing stress of 3 tons multiplied by the same factor four, gave a shearing stress in the seam rivets of 12 tons, a much higher stress than was stated to be the source of trouble. Yet in that instance there was no failure. He would like to add that this was not an isolated case of where breakdown had occurred in a vessel's gunwale unaccompanied by disturbance in the seam rivets, as evidence of abnormal shearing stresses, though acccording to calculation such disturbance should be expected. It had been stated

Mr Benson Taylor.
that the "Cobra" Commission had been empowered to test to destruction a government vessel. He thought it would be of great value, as bearing upon this question, to know if particular observation had been made of the shell seams while that experiment was being carried out. In regard to Mr Reid's remarks he would like to add a word as he had been personally associated with the vessel mentioned. Scantlings tabulated by registry societies must always be regarded as their minimum requirements, and owners knowing this, not infrequently specify increased material at parts most subject to wear. In this case it was of interest to know that none of the extra material was put into the structure in such a way as would reduce the shearing stresses; true, a seam at the bilge was treble riveted, but this was too far below the neutral axis for the purpose. A sister vessel constructed by another builder had double riveted seams throughout—these vessels were 500 feet long and had proved quite satisfactory. He thought it a pity that the ingenious combination of formula which had been prepared by Dr. Bruhn should run the risk of being considered as of little practical use—but he was with those who considered that a groundwork of assumption was not a sufficient foundation on which to base serious alteration in existing practice.

Mr A. Scott Younger, B.Sc., (Member) regretted he had not had an opportunity of listening to the paper being read, but he had since had an opportunity of reading it. So far as he had been able to follow the discussion, it seemed to him that it had narrowed itself down into a marked difference of opinion between Dr. Bruhn and certain of his critics regarding the shearing stresses which took effect about a quarter of the length of the ship from each end. He had not been altogether able to follow Dr. Bruhn in his investigations regarding these stresses, but he was aware that investigations taken out for static conditions showed an excess of shearing stress at the points indicated in Fig. 9. Static conditions, however, had never yet slackened any rivets, and he was inclined to agree with those who maintained that much of the trouble that arose was due more to defective

workmanship than to severe stress. The occurrence of one or two cases in which steamers showed distress at these parts would not prove this particular theory, as such cases could be explained much more simply by defective workmanship. Personally he would be much obliged if Dr. Bruhn would make it clearer in his reply precisely why these stresses were limited to the particular areas indicated in Fig. 9. of his paper.

Professor J. H. Biles (Vice-President),—The argument presented in the written contributions by the gentlemen connected with the same Institution that Dr Bruhn acted for, seemed to him to have an underlying fallacy in them. At the last meeting he had suggested that, it was possible that some of the trouble which arose in the parts Dr. Bruhn had been dealing with might have been due to defective workmanship. That suggestion was made because in one of the ships designed in 1899, in which the treble riveting that Dr. Bruhn now brought forward was actually carried out, the landings were treble riveted. The riveting was much closer in the frames, and the framing was double, so that it was double as well as being closer. Still, at the part where the trouble was likely to occur, trouble did occur. The argument that Mr Thearle had brought forward was that the trouble must have been due to the cause alleged by Dr. Bruhn, because if it were due to workmanship the effect would have been shown in other parts of the ship. Supposing a ship was uniformly defective all over in the matter of riveting, that was to say, that in taking it in batches of dozens of rivets the rivets were below ideal perfection, one would naturally expect to find the defect shown in the part where the stress was greatest. If it showed at such a point it was no proof that the workmanship was not bad. If a ship were perfectly riveted all over, probably the defect would not show itself at the part where the stress was greatest, and then the same argument would lead to the conclusion that the stress could not be greatest at that part because no defective rivets had shown there. He considered the argument that it could not be due to defective workmanship, because it would have shown

Prof. J. H. Biles.
in other parts of the ship was illogical. He thought that what Mr Fowling had said was perfectly true, namely, that with the increase in the size of ships it had become more difficult to secure good workmanship. It was possible to find men who could knock down a 1-inch rivet perfectly satisfactory. It was not possible to find every man who could satisfactorily knock down 1-inch rivets. As the size of the rivets increased the number of men who could do that work would decrease, and therefore they were likely to have defective workmanship as the ships increased in size. He thought they would find it oftener because the stress would become more. It might not be defective workmanship in the sense that it was careless workmanship, but it would be defective, because it was impossible for men to do better than had been done. He therefore agreed generally with the principle that if they wanted to make a ship strong enough in the part where the stress was greatest, and two rows of rivets would not hold the ship together, then they must put in a third row. That was all that Dr. Bruhn had suggested, and it was a conclusion he thought they would be inevitably forced to as ships increased in size. Whether it would have to be done at one particular point in the increase of size or at any other was quite another matter. Inevitably with the increase of size in ships and with the inability to increase the power of men to knock down rivets, they would be compelled to increase the number of rivets in the edge riveting. The reason he had hesitated to say, in the case which he had in his mind where a treble row of rivets had been put in the landing which had failed, that the defect was due to inferior workmanship was because the ship certainly had been ashore, not very heavily, but she had touched. When a ship touched the ground it was difficult to say what would happen. That pointed to the consideration, which was an important one, that as ships got larger their draught must inevitably be increased or they would not be profitable ships. With the increase of draught in these ships there was more liability to touch the ground. If a vessel touched the ground and got off all right nothing was said about it, the

ship went to sea with rivets strained, and the inference was that bad rivets had been put in. If the vessel was aground it was difficult to say how grounding had strained the riveting, and therefore he hesitated to say that in the case where a treble riveted landing had been damaged that the defect was due to workmanship. Someone had already made remarks with reference to vessels going ashore, and that damage had been caused which had been imputed to structural weakness. The same remark applied to damage through fenders. If the side of a ship were damaged by a fender it probably would not be seen at the time, but the sea would get the credit of doing it, and the ship would be described as having been badly riveted. All these things had to be taken into consideration. There could be no doubt, he thought, that the maximum shearing stress which came upon a ship came at the place where Dr. Bruhn had indicated. There was no doubt about that at all. It was a matter that could be mathematically demonstrated. They had alongside that the fact that vessels did show the maximum stress on rivets at those points. These were facts that they could not get away from. Whether it was necessary in all ships above the size that Lloyd's had now decided upon to put a treble row of rivets in or not was a matter that each person would have to decide for himself, according to the circumstances of the case. They were all indebted to Dr. Bruhn for bringing this question so prominently before them in the way he had done.

Mr DENNY.—He only wanted to make his position perfectly clear before Dr. Bruhn replied. He did not deny that Dr. Bruhn's paper was strictly correct so far as it indicated the place where the maximum stress occurred, but what he did deny was that Lloyd's were right in fixing the length for consideration at 450 feet, and that something must be done at 480 feet.

Dr. BRUHN.—There must be three rows at 480 feet and between 450 feet and 480 feet something less was required.

Mr DENNY.—Professor Biles said that each person must decide the question for himself.

PROFESSOR BILES.—As far as he could.

Mr Denny.

Mr DENNY.—But there was no choice when building to Lloyd's and that was what he protested against, nothing else. He did not say that three rows were not necessary in a ship 800 feet in length, because he did not know, but they were not necessary in a ship 480 feet in length. He would like to ask Dr. Bruhn, who had had all this evidence placed before him, whether this defect was found on every ship over 500 feet in length, or in every ship over 550 feet in length, or in every ship over 600 feet in length? He could answer the question in any way he liked. That was the only point that he would refer to. There was no doubt in his mind that the region which Dr. Bruhn showed, was the correct region, but he deprecated piling weight on vessels without proper consideration.

Correspondence.

Mr S. J. P. THEARLE (Member) cordially agreed with the other critics of Dr. Bruhn's paper in considering it a very meritorious and valuable contribution to the Institution's proceedings. It took up a subject which was carried to a less advanced stage many years ago by the late Mr John, when he investigated the principal stresses upon ships. The largest vessel then building and at work was much smaller than very many now existing. At that time only the principal tensile stresses encountered at the upper works of a vessel amidships were of sufficient importance to demand attention, but to-day vessels were being constructed of such a large size that their maximum shearing stresses also required to be specially provided for. It was not correct to say the evil was first disclosed and then a reason sought for it. Thirty-seven years ago, when a student at the Royal School of Naval Architecture, he was taught where to look for the maximum shearing stresses in a vessel's shell plating, but it had remained until quite recent years for it to become a matter of urgent necessity to determine comparative quantitative values for the shearing stresses set up under conceivable conditions. When vessel after vessel of large size was found to show strained riveting

in the landing edges, at the very places where it was known the shearing stresses upon the edge riveting were greater than elsewhere, and when it was observed that at other parts of the same vessel's plating the riveting was sound, one did not need to hesitate long before assigning a probable cause. Subsequent investigations confirmed just what the phenomenon had suggested. It had been said in the course of this discussion that if the theory laid down by Dr. Bruhn was sound, then the "Great Eastern" (see Fig. 13) should have had started rivets in her single riveted landing edges. But anyone familiar with the structure, riveting, and loading, of the "Great Eastern" would know that with her two shells and two longitudinal bulkheads, closely spaced rivets, and comparatively small displacement, the conditions were quite dissimilar to those of a steamer of modern type, proportions, construction and riveting. Upon investigation this had been found to be the case, and the intensity of shearing stress upon the edge riveting where greatest in the "Great Eastern" was very much less than in a modern steamer of the same length. He could not agree with those who attributed to bad workmanship what had been observed in so many cases of vessels built at shipyards of high repute, because, if the workmanship were at fault, why should the bad riveting be found at these places and nowhere else in the vessel? But his experience, which was not a brief one, was that never since ships were built of iron or steel had the workmanship in them been generally better than it was to-day. Damage by rubbing against a jetty was, of course, a familiar experience with all surveyors, and serious cases of the kind had been met with quite recently; but the numerous instances of rivet strain which led to Dr. Bruhn preparing his paper were not of that kind. He noticed that one speaker said the evidence of experience went to show that the factor of safety in the smaller vessels did not greatly differ from that in large ships, and that all well designed vessels above, say, 300 feet in length were subject in practice to fairly uniform longitudinal stresses. This was not borne out by his experience, nor was it in accor-

dance with what he would expect. Certainly the result of Mr John's investigations did not point that way, nor had his own, and he had never heard such an opinion expressed before. Dr. Bruhn's remarks about the yielding of framing appeared to have been misunderstood, but as Dr. Bruhn would be present at the next discussion of his paper he would be able to explain what he meant.

Mr CHARLES FOWLING considered Dr. Bruhn's paper a valuable addition to the records of the Institution, as it drew attention to the stresses at certain parts of the structure, and on the rivet connections at those parts, which had not been hitherto closely considered in the case of merchant vessels. The first part of the paper, which dealt with the butt connections and the relative stresses on the plating and rivets at the topsides, might generally be accepted without discussion. It served as an introduction to the second part which dealt with the rivet connections at the edges of the strakes of plating. With regard to the riveting of the edges, it had been found advisable to increase from single to double riveting as vessels increased in size, and it was not inconsistent to assume that as vessels continued to increase in size, a point would be reached when it would become necessary to again increase the edge riveting beyond what was practicable by a mere increase in the size of the rivets or by a closer spacing. Whether or not this point was reached in vessels of 480 feet in length was a fair matter for discussion by the Members of the Institution. In Messrs Holt's vessels, to which reference had been made in the course of this discussion, it was the practice several years ago to single rivet a few seams of outside plating, the greater number of the seams being double riveted, but for the last 12 or 13 years it would be found that the practice had been to double rivet the whole of the seams. Dr. Bruhn told them that several large vessels had shown distress in the edge riveting within the zones marked on Fig. 9. If external causes were neglected, such as rubbing against a quay wall or dock entrance, or striking another vessel, which causes were usually determinable by

the marks that were left behind on the plating, then there remained three causes which might account for the trouble, (1) Inferior workmanship, (2) Panting, (3) Shearing stresses. (1). There was no doubt in the large vessels now built, the limit in size of rivets which could efficiently and continuously be hammered down by manual labour had almost been reached, and it was quite possible that causes such as those referred to by Mr Denny might lead to certain patches of riveting not being so good as the generality of work, but it was only reasonable to expect that these patches would appear at different parts of the vessel, that they would be in different places on the opposite sides of the same vessel, and in different vessels in still different places. Instead of this it was found that the distress in the edge riveting in the majority of the cases referred to in this paper existed not only at the same parts on opposite sides of the same vessel, but at practically the same parts in all the vessels in question, that was in the region of the neutral axis and at about one-fourth of the length of the vessel from each end. And as it was not likely that bad workmanship would always occur at a certain part in all these vessels, while it was good at every other part, the question of workmanship might fairly be left out and not taken as the cause of the rivet trouble they were dealing with. (2). Next with regard to the panting of the side, this might be of two sorts, there might be panting of the frames, which, of course, would take the plating with them, or there might be only panting of the plating between the frames. In either case an experienced surveyor should be able to diagnose the symptoms sufficiently well to be able to state if panting, either of frames or plating, had been the cause of the trouble. It was only fair to assume that the vessels in question had been surveyed by competent surveyors, and in the absence of any statement from them that the distress had been caused by panting, the trouble should not be attributed to that cause. In fact, if a vessel panted it would probably be in the fore hold close abaft the collision bulkhead, or just clear of the panting arrangements that might be fitted at that part,

where the unsupported height of frame from tank top to deck was greatest, and not at about a quarter of the vessel's length from the end, where the height was not so great; nor would it be found, as was probably the case in some of the larger vessels in question, in way of or above the lower tier of beams. (3). As the last cause there were the shearing stresses. Dr. Bruhn had shown that these were at their maximum within the zones marked, a fact which although known for a long time had not previously been specially dealt with. He, likewise, pointed out that it was at these parts the riveting had been found to give trouble, not in one case only, but in several. Dr. Bruhn's calculations had not been questioned, but exception had been taken to his practical deductions, which, however, did not appear to be far wrong when the causes previously referred to were eliminated, and which, for the reasons stated, could not be taken as the cause of the slackened riveting. The trouble appeared to be due to want of rivet power to withstand the shearing stresses at the parts named, and the only cure for that was to increase the rivet attachment. Dr. Bruhn proposed to do this by increasing the riveting of the seams from double to treble riveting at certain parts of the vessel. Others may be of opinion that improved results might be obtained by other means, perhaps by increasing the rivet attachment of the plating to the frames, either by closer spacing of the rivets or doubling the frames, but if it were necessary to put in additional material, then the best value for the weight added would probably be found in increasing the breadth of the landing edges and fitting three rows of rivets as suggested.

Mr B. J. Ives remarked that the conclusion which Dr. Bruhn had come to in his admirable paper was, that the only method of reducing the stresses was by increased rivet area, and he suggested that as the size of the vessel increased it must be obtained by the fitting of an additional row of rivets. The rivets connecting the frames and outside plating were subjected to the same stresses as those experienced by the edge riveting, the pull and push stresses shown in Fig. 8 acted on the frame riveting in the same manner

as on the edge riveting, but experience pointed to it being in the edge riveting where weakness existed. The support which the riveting through the frame and outside plating gave to the edge riveting must be considerable (these rivets being among the first which would be effected by a breakdown in the edge riveting), and while agreeing with Dr. Bruhn that increased rivet area was necessary in the larger types of vessels, a point which might have been brought out more fully was whether an addition in the riveting through the framing would not have a beneficial effect on the edge riveting. With the largest vessels the spacing of frames was considered perhaps more fully than any other problem, and this spacing was practically fixed by the scantling of the outside plating. It was customary in large vessels to fit beams to every frame, and an increased spacing of the same might be made without injudiciously affecting the main structure in the upper works. This increased spacing would mean reinforcing the frames, and a method of doing this would be to fit an angle frame at the back of the main frames riveted to the main frame and shell, which would allow the beams, floors, etc., to be spaced wider by say 4 inches, thus saving part of the addition involved by the fitting of this angle, Fig. 10. The number of pieces to be

Fig. 10.

handled would be reduced and at the same time additional riveting would obtain, which would be of support to the edge attachment. This additional angle would not require to be carried to the top of the structure, and might be stopped at a reasonable height above the part of the vessel where the shearing stresses were at a maximum, as indicated in Fig. 9; but it would require to be fitted to all the frames, otherwise an increased thickness of plating would be necessary. The cost of riveting the same would not be greater, or very slightly so, than the additional row proposed by Dr. Bruhn.

Mr B. J. Ives.
The method proposed by Dr. Bruhn was no doubt the simplest and most effective which could be adopted to reduce the stress, but as in these large vessels so many things had to be considered, it would appear not to be out of place if other problems such as that instanced were considered with it.

Mr JOHN M'KENZIE (Member) concurred entirely with Dr. Bruhn in all that he had said, and especially in the last paragraph of his paper where he stated "that practically the only way of reducing the stresses is by increased rivet area." In some cases this might be obtained by closing up the spacing of the rivets, but eventually as the size of the vessel increased, it must be obtained by the fitting of an additional row of rivets. In following the discussion he was much struck with the diversity of opinion expressed by some of the members. There was no doubt that there had been a great deal of trouble with the riveting in some large vessels. Whether this was due to inferior workmanship, or that the rivets had become too large to be efficiently set up by hand, the fact remained that the rivets got slack and sheared, in many vessels, at the parts mentioned by Dr. Bruhn. If these defects could be cured by additional rivet area (and he believed they could), then it should be done. Mr Denny seemed to make a point of the weight of a few extra rows of rivets in a vessel, "piling on weight," he called it. The extra weight would only be a very few tons in the largest vessels and need hardly be taken into account. Speaking from the point of view of an owner — and it was he who paid for all extra material—it did not matter much to him whether his vessel had one or three rows of rivets in some places. What he wanted was a good reliable tool to work with, and the little extra initial cost for fitting extra rows of rivets would be nothing compared to the loss of time and annoyance caused by vessels having to be partly re-riveted, before they were many months old. Cases of this kind had come under his notice, and the vessels had not been ashore. In these days of keen competition, owners (and especially owners of tramp steamers) had to fix their

vessels weeks or even months ahead, and if on arrival it were found that the vessel required to be partly re-riveted, much time would be lost, and arrangements previously made would be upset, perhaps to such an extent as to mean missing a charter. On these grounds he entirely concurred with Dr. Bruhn.

Mr F. J. Rowan (Member of Council) observed that with reference to the allusions made by the President, and some of the members in the discussion, to the use of machines for riveting the side plating of ships, he would like to make one or two remarks. Some years ago he made a careful study of the then published information on the strength of riveting done by hand and by various kinds of machines, and found very distinct testimony that whilst there was practically no difference between the different kinds of work as

Fig. 11.—Electro-Pneumatic Riveter, with spherical flange attachment for adjusting direction of blows.

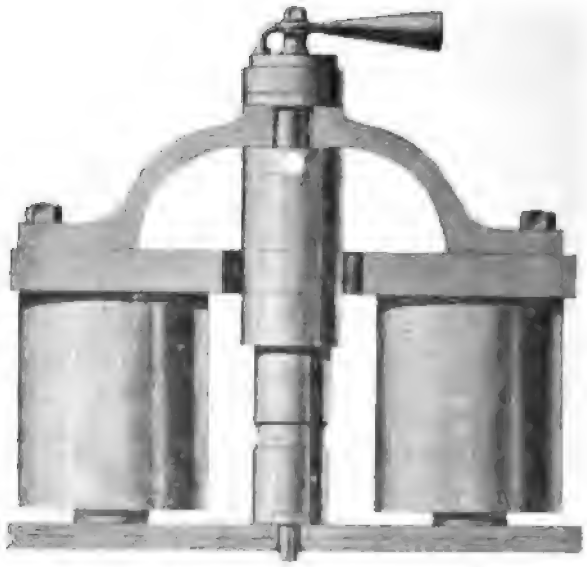

Fig. 12.—Electro-Pneumatic Holder-up, with pneumatic jack and electrical switch on top.

regarded ultimate strength of the joints or resistance to shear, the work done by machines showed superiority in preventing visible slip for a longer period than was the case with hand work. In the opinion of Professor Unwin and some other authorities, this was due to the better clipping of the plates together by machines, and to the plates being generally held together while the rivets were cooling. It did not appear however that it was necessary to keep up a great pressure on the rivets themselves after having been properly set up. And with regard to the rivets themselves, those put in by machines which had a hammering action were as strong as those put in by hydraulic machines, both having the same superiority over hand work. On this account it would appear that, if means for clipping the plates together could be combined with pneumatic riveting hammers the best class of work

could be produced. He had designed such an arrangement, making use of electro-magnets on both sides of the plating—one magnet being used for carrying the hammer and the other for the holder-up. This arrangement was illustrated in Figs. 11 and 12. These magnets could be made of any size and strength wanted, and they had the advantage of allowing the clipping pressure to be kept on the plates while the rivet was exposed for cooling. The magnet which carried the hammer relieved the workmen of the jarring or vibration which was so severe in its action on them when the hammers were applied by hand only, and therefore enabled them to put in more rivets per day. He did not think sufficient consideration had been given by shipbuilders to the possibilities of this method of doing the work, and felt sure they would find in it a solution of many difficulties.

Mr Foster King thought with reference to Dr. Bruhn's remarks regarding Professor Jenkins' expressed opinion as to the effect of a vessel's form upon her longitudinal stresses, that it was only right in justice to Professor Jenkins and himself to explain that the investigations to which he referred were originated for the purpose of proving the view which was held by Professor Jenkins at that time, namely, that fine vessels were not subjected to such severe longitudinal stresses as vessels of full form when placed upon a wave. The results of those investigations did not bear out this theory, and were sufficiently convincing that the reverse was the case for Professor Jenkins to change his mind on the subject—though unfortunately he never had the opportunity to make this generally known. While referring to this subject, he would emphasize the remarks he had already made upon virtual water pressure and its effect in altering the conditions of support as compared with normal pressure.

Dr. Bruhn said that as there had been a considerable number of points raised in the discussion on this paper, he hoped he might be excused if his reply was somewhat lengthy and detailed. Generally speaking, the view taken of the paper would

Dr. Bruhn.
appear to be that the theories advanced which pointed to large stresses on the riveting of the landings of shell plates were fairly correct, and that if any cure was wanted the one proposed would be the correct one. On the other hand, some critics had considered it doubtful if there was sufficient evidence to show that the stresses were really too high, and that any remedy was called for. Some persons might be fortunate enough not to come into contact with troubles of this nature, and for their benefit it might perhaps have been desirable to have enlarged somewhat on the latter part of the paper. He admitted it might have been somewhat step-motherly dealt with, but his main object was to show that the stresses on the riveting at the landing edges were relatively too high, and he intended only to corroborate that with a short statement to the effect that experience had proved the contention to be correct. He did not know what grounds Mr Denny and Mr Ward had for suggesting that the theory was worked out to suit the case when it arose. That was not so. The shearing stresses had received attention by many before, notably the late Professor Jenkins. As early as 1894, he (Dr. Bruhn) looked into this question, and worked out the stresses on the edge rivets in a large Atlantic steamer. Later, he had occasion to repeat the investigation, and when the first case of straining at the edges was reported he gave as his opinion that it was only what might be expected, and that more cases were sure to follow; which expectation was fulfilled. However, even if the theories had been worked out to explain the trouble, it seemed to him that would only have been the normal course of events. It was usual to have a disease before one could diagnose it. With regard to the first part of the paper, he would endeavour to make his views a little clearer, as they appeared to have been misunderstood in some instances. Speaking with regard to stresses generally, it would appear that it could not be insisted upon too often that one knew no quantitative stresses, and could calculate no general stresses whatever upon a ship's structure. Certain numbers were dealt with which it was convenient to designate stresses, but the actual stresses might be

greater or might be less; no one could say what they were. The calculated figures were only of value as a relative measure of the stresses, and served only as a standard of comparison. What he had therefore attempted to do in this instance was to work out the stresses on the riveting at certain places where sufficient experience had been obtained to shown that the rivet power was not greatly in excess of what was required. He had next worked out the stresses at certain places of the structure where so much experience had not been gained, and as these stresses were found to be greater than those on the riveting of which there was experience, he contended that there was good cause if trouble did take place. The riveting of the butts of the sheerstrake had been selected as the best standard, as it was probably not much, if anything in excess of what was wanted, and he would point out to Mr King that, as it supplied the basis for comparison, it was of great direct bearing with regard to the stresses on the edge riveting. Then, under the same conditions he had estimated the stresses on the riveting of the landing edges, or perhaps he should say the comparative numbers, because, in spite of the fact that he specially mentioned that the values were only relative, one gentleman found fault with the absolute values, in the very same breath as he admitted his statement as to their being only relative. It would perhaps have simplified matters if he had stopped here, but he thought he would carry the comparison a little further and attempt an estimate of the relative stresses on the frame rivets as well. What he had shown was, therefore, not so much that the stresses on the edge riveting were high or low, but that they were in the large ships higher than the stresses on the rivets in the butts and in the frames, and that, therefore, be they actually what they may, the factor af safety was less at this place than at other places of the structure, which could hardly be considered logical. It was his intention to treat the matter as broadly as possible, and for that reason he had selected a series of imaginary ships of uniformly increasing dimensions, instead of taking odd instances of actual ships which would not have given

a good general view of the question, owing to the interference of individual peculiarities. A certain uniform increase in the stresses on the longitudinal and transverse material had also been assumed to eliminate the variation in the calculated stresses, which would have been apparent in any given selection of actual ships The actual magnitudes of these stresses were not intended to serve as a standard, as Mr King and Mr Jack had apparently assumed. They represented, however, a very fair average for the calculated stresses on vessels of the ordinary type and scantlings, but whether they were a little high or low did not really affect the question under consideration very much, as the values there compared were relative. As to the large number of assumptions, many of these were necessary to place the comparison on a uniform basis, and it was easy to make the corrections—as they ought, of course, to be made—in the individual cases where the required particulars were known. Professor Biles said that "he was not at all sure that Dr. Bruhn's statement should be accepted, that the transverse framing was weak enough to make the difference between successfully resisting the rivet stress and unsuccessfully resisting it." He would quite agree with the statement, if he had made it, but judging by the criticism of the gentlemen who followed, it seemed as if he could not have made it. Apparently, Professor Biles had misunderstood him. It was entirely misleading to ascribe these strains to the panting of the frames. It was the popular opinion to assign the trouble to this cause, though why it should be so was not apparent. An estimate of the stresses due to panting was included, because they might, of course, in some instances, add slightly to the magnitude of those due to shearing forces, but they could do so at the most, only to a very limited extent. The relative values of the stresses due to panting was almost certainly overestimated in the calculations he had made, because the stresses on the framing, particularly in the larger vessels, would probably not be so high as assumed. If the stresses due to panting were really the main ones, then the straining would appear in the fore hold just behind the peak bulkhead, and

not at the places in the fore and after bodies where they were actually found. The damage would also be on the windward side in the fore and after bodies, and not on alternate sides, as had been the case in some instances. Moreover, when panting took place the beam knees and floor end brackets showed signs of straining, as in the case quoted by Mr King, but such damage had not been found in conjunction with the trouble at the landing edges. In the paper he said that all the stresses were relative, and he did not therefore quite see the purport of Mr King's statement, that they should not be accepted as actual stresses, and there could be no reason to be alarmed at a stress of 10 tons. The actual stress, including the dynamical part, might very likely be less than 10 tons. Mr Taylor pointed out that the factor of safety would only be 2·8. It did not really matter what the factor of safety was, if the material did its work without straining, and if it did that with a calculated stress of 10 tons per square inch, then that only went to show that the assumed conditions had probably been too severe He was also rather surprised at Mr King's remarks that, the stresses at the gunwale were not less in smaller than in larger vessels. He pointed out that these calculated stresses usually turned out less in smaller vessels as shown many years ago by Mr John. They represented of course definite figures, which could not be altered without extensively modifying the practice with regard to the scantlings of ships. He might refer Mr King to a paper read at the Institution of Naval Architects, in 1892, by Mr Denny. The author there stated with reference to one of the tables:—"I have added this table to show how much smaller the stresses are in small than in large vessels, and also to show that in regard to fine and full vessels what holds true in large vessels also holds true in small vessels." Mr Denny in the same paper also showed a stress of 9·76 tons per square inch, which was practically the same as the 9·9 tons to which Mr King and Mr Taylor took exception. In dealing with the frames, either the stress in each case had to be worked out on some basis or other, or a value had to be assumed. Great inconsistencies would have been apparent if the former

method had been adopted. The stresses would have jumped up and down without any apparent reason, due to the fact that the strength of the various systems of framing did not usually progress with even steps. Therefore the latter method was chosen, and a more perfect arrangement of scantlings than was found in practice assumed. But even that appeared not to satisfy everybody. He quite agreed, however, with Mr King's desire for consistency in the arrangement of transverse scantlings, as he thought his assumption would go to prove. With regard to the bending of the frames, it was not suggested that they yielded perceptibly in the space between two rivets, but if any stress came upon them—in other words, if they did any work at all—then they must yield to a certain extent, and the trouble was that they could not yield sufficiently to bring them properly into play, until the rivets in the landing edges were sheared. It should also be borne in mind that it must be the flange attached to the shell plating that did nearly all the work with regard to this action. The remainder of the frame girder could do but little. If the frame really did efficient work in this respect, then one might expect to find the frame rivets slack as well as those in the landings, but that was not the case. The displacement alone could never be a scientifically exact measure of the stresses on a ship, but in conjunction with the length of the vessel, it formed as good a practical guide as one could get to the required strength of the structure. The ordinary calculated statical stresses would, of course, under similar circumstances vary as the displacement. Certain other stresses, as those calculated by the late Mr Read, might be of greater importance in fine than in full vessels, but the dynamical stresses due to the vessel's rough tumbling amongst waves must be increased by increased fullness of form. The flatter form of the bottom towards the ends of the vessel provided additional area for the forces to act upon, just as a fuller vessel offered greater resistance than a fine one to propulsion. The increased magnitude of the blows on the fuller form was demonstrated by the damage to bottoms at the forward end. The forces causing this damage were of course the same as

those causing dynamical increases in the shearing forces. They must always exist to a greater or less extent, but they were naturally enormously augmented when the vessel was light. In support of his contention on this point of fine forms versus full ones, Dr Bruhn again referred Mr King to Mr Denny's paper, which the author concluded by stating—"From all these figures I hold that the fine ship can be built of lighter scantlings than the full vessel," and in the discussion Mr Denny stated that his experience also confirmed this conclusion. Dr Bruhn also pointed out to Mr Taylor that those figures, which were to form the basis of alterations in existing practice, were entirely derived from assumptions. He did not know what calculations the late Professor Jenkins made on this question of the relative stresses on fine and full formed ships, but he had heard Professor Jenkins express the views he had brought forward, and Mr Denny again supported him in this connection, as he commenced his paper by stating—"In common with the late Professor Jenkins, I have always held that fine vessels could be built of lighter scantlings than full ones." The case reported by Mr Schlick would very likely be due to panting, but that did not affect the contentions he had brought forward. Mr Jack pointed out that instead of the stress on the solid plate, that in way of the frame rivets should be adopted as the standard, and that the correction for wave pressure should be made. As the stresses were relative it did not affect the result whichever method was adopted, and so the question was not of much importance. He could not see at all how Mr Jack got the stresses on the frame rivets to increase simply as the strength of the frame. The stress on the frames was assumed for the given scantlings, but it would of course be reduced with increased dimensions of the frame. Mr Jack mentioned the "Great Eastern." Attention had already been drawn to the main features of that vessel by Mr Thearle. She had a load displacement of 27,384 tons, and a depth of 58 feet. The rivets in the landing edges were $\frac{7}{8}$ of an inch, spaced $2\frac{5}{8}$ inches part. It was true there was only a single row in the shell plating, but, as Mr

Dr. Bruhn.

Jack himself pointed out, and as would be seen from Fig. 13, there was an inner bottom at the position of maximum shearing stresses. There was thus in reality two rows of rivets, which, with the closer spacing of the same, would be equal to treble riveted landings with present day spacing. But, in addition, this vessel had two fore and aft bulkheads attaching the decks to the bottom for nearly half the vessel's length amidships, which would add considerably to the resistance to shearing forces. Neglecting, however, this assistance, the stress on the edge riveting of the "Great Eastern" would, by the formula on page 68, be :—

$$q = \cdot 0065 \frac{27384 \times 2 \cdot 625}{58 \times \cdot 937^2 \times 2} = 4 \cdot 55 \text{ tons per square inch.}$$

The displacement was the load displacement given by Mr Scott Russell, and this was probably never approached in this vessel. It was therefore probable that the stress on the rivets in the landing edges of the "Great Eastern" never reached half the amount which was borne by many modern vessels without signs of straining. Mr Denny referred to Mr Holt's steamers. These vessels had often been brought forward as examples of what could be done by single riveted landings. He believed, however, the facts revealed that four landings in the two 'tween decks were single riveted, as pointed out by Mr Fowling. The sheerstrake landing and all the other remaining ones were double riveted. The position of maximum stress would in these vessels come below the last tier of beams, where there was double riveting. Even if the landings had all been single riveted, he did not think there would have been much cause for alarm. The registered dimensions of these vessels were only 336 feet by 38·5 feet by 26·8 feet, the proportion of depth to length was comparatively small, and the tonnage co-efficient was only ·74. The rivets in the landing edges were $\frac{7}{8}$ of an inch, spaced 3·43 inches apart. If a displacement of 5700 tons were assumed this would give a stress of only 5·2 tons per square inch, due to shearing forces. It would be seen with reference to Fig. 5, that this stress

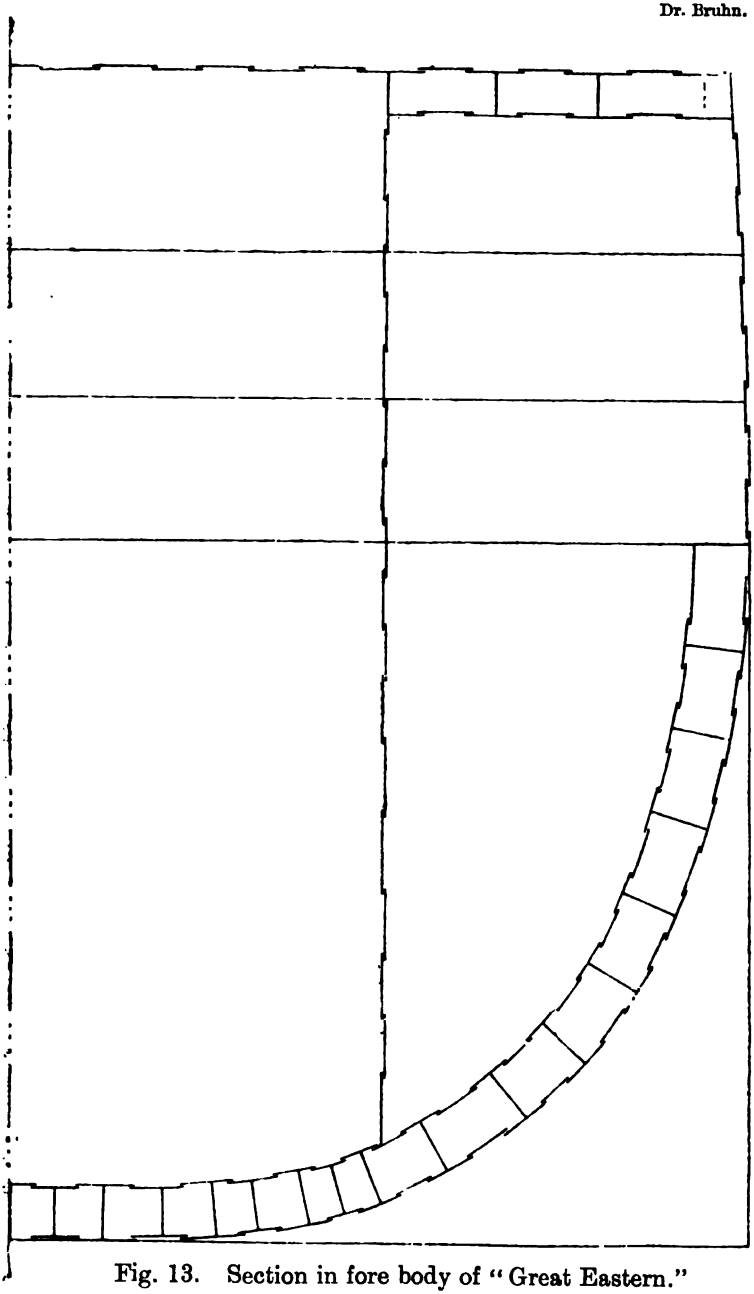

Fig. 13. Section in fore body of "Great Eastern."

was less than that on the butt rivets of a quadruple riveted lap in a vessel of the same length. Fig. 5 and Fig. 6 showed not only that the stresses on the rivets in the landing edges were relatively unduly high in the large vessels, but also that they were in relation to the stress on the butt rivets less in the small vessels. In other words the curves would tend to show that the limit for single riveting might perhaps, with safety, be extended somewhat. These vessels were built for Mr Holt prior to 1890. Since then, Mr Wortley stated in the discussion on his paper at the Institution of Naval Architects, that Mr Holt had quite departed from single riveted landings. Mr Denny also referred to a vessel 480 feet in length, built by his firm, of lighter scantlings than required by Lloyd's Rules, and he stated that this vessel had had no slack rivets in the regions indicated in the paper. He was very pleased to hear that that was so, as this vessel was not of a length to require the extra row of rivets.

Mr DENNY—If she were six inches longer would she not require it?

Dr BRUHN—He thought not. Eight inches might turn the scale though. The vessel had, however, had a number of shell rivets renewed in the fore hold, but the trouble might have been due to other causes. In other respects the experiment of building a vessel of the lightest possible scantlings did not in this instance appear to have been quite successful, judging from the several little additions which had been made to her at various dates. The "Ireland," he learned from Mr Denny, was a light scantling cross-channel service steamer, and he did not think she should be compared with vessels intended for Atlantic work, such as those under consideration. Looking at this question of rivet attachments quite apart from any calculations: Was it logical to treble rivet or even quadruple rivet a butt at the ends of the vessel, and to double rivet the landing edges at the same place? Whatever stresses occurred there due to panting, must be in a vertical direction, and in the fore and aft direction there could not be any appreciable forces. He did not know whether Messrs William Denny & Bros. fitted more

rows of rivets at the butts than at the landings at the ends of vessels built by them, but if they did, he thought it was an unnecessary piling on of material where it was not wanted. Mr Taylor took a very narrow view of the paper, and did not appear to see the nature of the assumptions made. There were really no more assumptions affecting the stresses, than were made in all cases when the ordinary bending moment and moment of inertia calculations were made. The additional assumptions were, as had already been pointed out, due to the fact that designs of ships had been dealt with, but as actual ships could easily be constructed fulfilling the assumptions they might be eliminated as not affecting the conclusions. The stresses on the frame rivets should, of course, be calculated by the formula given on page 72, which showed that these stresses depended on the stress on the framing p_1. The value of p_1 should be estimated in each case, and he did not think Mr Taylor would find it to vary as the length of the ship. In the paper the stresses on the framing had been assumed to be of certain values, and it happened that these values were the same as those assigned to the longitudinal stresses, when the vessels were of the dimensions and proportions stated, but this equality would, naturally, not hold good under altered circumstances. With regard to the vessel grounding and breaking without straining the rivets in the landing edges, he would like to point out that, it was quite impossible to say what would take place when a ship took the ground as had been pointed out by Professor Biles. It was, however, a very natural thing to expect vessels to break without straining the rivets in the edges of the shell plating, as would be evident from the figures quoted by Mr Taylor himself, which showed a stress of 7 tons on the material at the gunwale, but only 3 tons on the rivets at the landing edges. If as many vessels were reported to have had their rudder stocks broken, as had been reported with defective riveting, he had no hesitation in saying that the diameters of rudder stocks would be increased. If Mr Taylor had objections to basing alterations in existing practice on theoretical investigations, then there were the facts of straining to fall back on,

which no one could ignore. Some gentlemen suggested that if the straining was due to panting, then it might be better to prevent the panting by increased framing. He did not think so. If the frame girder A B, Fig. 6, was turned up horizontally and compared with the main structure of the ship, the edge attachment of the shell plating would then represent the butt attachment of the stringer and deck plates. Increasing the size of framing to prevent straining at the landing edges would, therefore, be equivalent to increasing the shell plating as a remedy for the straining of the riveting at the butts of the stringer and deck plating, and such a proceeding should be described as a clumsy application of the material. The frames should only be increased in size when they themselves showed signs of straining. And even if the straining at the landing edges were due to panting the remedy would be to provide more rivet power. With regard to the evidence of straining of rivets at the landing edges, there were at the office of Lloyd's Register, so many reports proving this that it would be undesirable to have any more. He could not, of course, give any particulars on this point, beyond stating that 52½ per cent of the number of cases were beam ships, 43 per cent had web frames, and only 4½ per cent had deep framing. None of the vessels below 600 feet in length had a tonnage co-efficient less than ·78, above that length the tonnage co-efficient gradually went down as low as ·69, pointing distinctly to the conclusion that the fullness of form was an important factor with regard to the magnitude of these stresses. The position of the affected areas and the absence of straining at beam knees and floor end brackets indicated also that the straining was not due to panting. In one instance, particularly, the whole of the trouble was in the 'tween decks which were of the normal height. No one would expect the vessel to pant in the 'tween decks when she did not do so below the lowest deck. The small proportion of deep framing vessels supplied additional evidence against the panting theory, as this was just the type of vessel which in practice was found most liable to that disease. The great number of beam ships also met Mr Denny's

suggestion that the absence of beams might have something to do with the trouble. In view of all the evidence in the possession of Lloyd's Register, he did not think Mr Denny could be considered justified in his remark about piling on material that was not required, which, after all, as several gentlemen had already pointed out, amounted to very little. He was surprised at Mr Ward thinking that the strained rivets occurring in patches weakened the case for the shearing stresses. By indicating the areas in Fig. 9 he did not, of course, mean to infer that a chalk line could be drawn on a vessel to include a space within which every rivet would be loose and outside of which every rivet would be sound. The straining of rivets was always found in patches, owing to little irregularities in workmanship, but if the affected rivets showed a tendency to occur more frequently in one region than in another, then the stresses at that place were too high. Several speakers had ascribed the slack rivets to bad workmanship. Was there, however, any good reason to suppose that the workmanship was less efficient now than formerly? Was there any cause why it should be worse in large than in small vessels? Was there any cause why it should be worse in the fore and after bodies of the vessel than amidships, or right at the extreme ends, or anywhere else in the vessel? Was there not, on the contrary, good reason to expect it to be, if anything, better at these places, where there was little bend or twist in the plates and where the work was more accessible than in most other parts of the vessel? And last, but not least. Was there any reason at all to suppose that the riveting of the edges of a plate would be less carefully done than the riveting at the butts of the very same plate? Professor Biles remarked that the defects might appear at the places indicated with the workmanship uniformly bad throughout the structure. But why call it bad when it was sufficient elsewhere? On the other hand Professor Biles pointed out that with perfect workmanship straining might not take place at the neutral axis. If that were so, it would lead to the conclusion that too much rivet power was supplied elsewhere, as it was enough where the stresses were greatest.

Dr. Bruhn.

Generally speaking, the proposal to improve the workmanship was, of course, a most praiseworthy one, but let it be done all round. It would be a most illogical proceeding to ask for extra special workmanship in conjunction with fewer rivets in one part of the vessel, for the stresses which at other parts of the ship were provided against by an increased number of rivets in conjunction with the ordinary standard of workmanship. Those who preferred to ascribe the trouble to bad workmanship might, of course, be considered right to this extent, that in any individual vessel it was possible that the straining effects might have been avoided with extra special workmanship, but the special workmanship could not be taken generally as an equivalent to rivet power. The question could never be whether treble riveting would be required or not, but only at what size of vessel it would be wanted. With extra special workmanship this size might be larger than otherwise, but it could never be justifiable to govern this limiting size by unusual circumstances, it must necessarily be fixed with reference to the ordinary standard of workmanship. He entirely agreed with those who pointed out the greatly increased difficulties in securing efficient riveting in vessels of the very large size now being built. Future mechanical appliances might overcome these difficulties, but until they were overcome they had to be met by other means, and if it were not possible to have few large and extra well "laid up" rivets it became necessary to have more smaller and ordinarily well "laid up" rivets. One case of strained edge riveting had come to his knowledge since writing the paper. It was a very large and important vessel where the workmanship could not very easily be improved upon. The whole of the trouble was in the 'tween decks, and could not therefore be due to panting. The straining was found to be so serious that it was necessary to remove all the rivets in the landing edges of extensive areas in the two 'tween decks, both forward and aft. Joggled straps were then fitted with two rows of rivets, in addition to those in the landings, which made the attachment equivalent to a treble riveted one. Doubling the frames had been suggested by some who had

taken part in the discussion as the best remedy against the shearing stresses. Such additional rivet attachment of the frames to the shell would naturally give some support to the edge riveting, but it would be both less efficient and more costly than that of treble riveting. On the other hand, doubling the frames, was of course, a most efficient method of obtaining additional attachment where the rivets in the frames and shell plating were being strained, and it was quite possible that it might be found advisable, as the size of vessels and spacing of frames increased, to introduce such doubling angles. In the fore hold, where the stresses on frame rivets naturally were greatest, they had in many instances been fitted already. It seemed to him that the chief difficulty with his critics had been the old one of believing without seeing. At anyrate if these gentlemen had the courage of their convictions and built these large full-formed vessels with double riveted landings, then he had no doubt they would see in time and believe.

Mr DENNY.—Dr. Bruhn had not thought it wise to answer his question, whether he found this defect in all vessels?

Dr. BRUHN.—He had not found it in all.

Mr DENNY.—In the majority?

Dr. BRUHN.—Yes, of large vessels.

Mr DENNY.—All full ships?

Dr. BRUHN.—Yes.

Mr DENNY.—No fine ones?

Dr. BRUHN.—No, not below 600 feet in length.

The PRESIDENT said that while the discussion had given evidence of considerable difference of opinion in regard to the questions raised by the paper, he thought that they were all agreed in this, that Dr. Bruhn had brought before them a paper which was of very great importance, and they must appreciate the amount of trouble and the amount of care with which it had been prepared. There seemed to be a considerable difference of opinion amongst shipbuilders and naval architects as to the strains and stresses to which the different parts of a ship's

The President.

structure were subjected, but there also seemed to be a general agreement that if some method of setting up rivets otherwise than by hand, could be devised, it would add immensely to the efficiency of their ships. He had had no experience in riveting of ships, but during the last twelve months he had had a very considerable amount of experience in pneumatic riveting, riveting thicknesses of metal from $1\frac{1}{2}$ inches up to 2 inches with $\frac{3}{4}''$ and $\frac{7}{8}''$ rivets, and he found that the rivets were set up in a way that hand riveting could not approach. He thought if some means could be adopted to increase the efficiency of riveting ships by the adoption of machinery, and he had no doubt that it would come in a very short time, it would probably enable shipbuilders to deal with greater certainty than seemed to be the case at present, with the strains to which the different parts of a ship's structure were subjected. He asked them to join with him in giving Dr. Bruhn a very hearty vote of thanks for his paper.

The vote of thanks was carried by acclamation.

CIRCULATION IN SHELL BOILERS.

By Mr WILLIAM THOMSON (Member).

(SEE PLATE VI.)

Read 16th December, 1902.

IT may suggest itself to some that the title of this paper refers to the circulation of water in the boiler. I desire, however, to treat the title on the broadest possible lines, viz., the circulation of all the fluids connected with the working of shell boilers, as well as the heat, which go to produce the final result of yielding mechanical power in the engine.

The solid substance coal in the furnace of the boiler, on being ignited, burns by reason of the circulation of air amongst the pieces of ignited fuel.

One pound of coal, measuring about 20 cubic inches, thus dissolves as it were in 11 lbs. of air measuring 136 cubic feet when cold, and in doing this a large quantity of heat is generated, and by this the 136 cubic feet expands to 293 cubic feet of flue gases, and this expanded air has to be circulated through the boiler flues on its way to the chimney.

The boiler problem consists in catching as much as possible of the heat which is thus generated through the circulation of the gases (oxygen and nitrogen, which constitute the air) amongst the burning coal, as the flame and hot gases pass through the boiler flues, and transferring as much of it as possible to the inside of the boiler, there to produce other forms of circulation. Firstly, the circulation of the water in the boiler. Secondly, the production of the gas steam, and its circulation from the boiler through pipes to the engine. There may be other steam and water circulations after the steam has left the cylinder of the engine, but at these I propose to draw the line.

The burning of the coal raises the first question which affords abundant speculation for the engineer. A very high temperature is no doubt produced at the point of combination of the oxygen of the air with the carbon and hydrogen of the coal, and as a result of this, particles of the carbon become heated to a very high temperature, to incandescence, and a large quantity of the energy thus generated and transferred to the solid carbon is liberated therefrom as radiant heat, which goes straight to and is absorbed by one side of the iron flue tube plates of the boiler, and gets transferred to the water on the other side of the plate there to inaugurate circulation of liquid and gas within the boiler.

It is probable that the place, in the circulation of air through the flues, at which the most intense heat is produced, is from the surface of the coal which is in a high state of incandescence, and I think it must be admitted that, whatever be the precise mathematical formula which expresses the transmission of heat through the boiler plate, the power of heat to penetrate the plate will be nearer the truth if expressed as the square of the difference between the temperature at the surface of the plate against which the flue gases impinge (whether from radiated or from convected heat, or from both) and the temperature of the contents of the boiler as a whole, rather than the suggestion that the power of heat to penetrate the boiler plate varies directly as the difference of the temperatures between the boiler and the flues, which, I think, few will now be found to believe. This raises the important point: At which part in the air circulation should the coal be consumed?

If we take the flame of an oxyhydrogen blow-pipe and hold the hand to one side of it, there will be little heat communicated to the hand, but if we allow it to impinge on a piece of lime, magnesia, or other so-called inert solid substance, we at once feel the effects of the radiated heat liberated from the rapid molecular movement of the surface of the otherwise inert material.

The problem would thus present itself—whether one can cause a greater amount of heat to penetrate a boiler by allowing the flame

to play directly on the plate, or by allowing it to produce to some extent an incandescent surface and thus liberate some of its energy as radiated heat.

With the object of illustrating this point, I might mention the case of a gas stove tested by me, in which the burned gases were allowed to heat, chiefly by contact or convection, a series of tubes inside the stove through which pure air passed, and this communicated a certain temperature to the air which passed through the pipes, which was measured by a thermometer. A brilliant idea occurred to the inventor of this stove; he would first burn his gas amongst asbestos filaments outside, producing a visible fire before he allowed the burned gases to enter the chamber containing the series of pipes, and when he had done so it gave him infinite disapppointment that the air coming away from the stove pipes was comparatively cold; and I am afraid I failed to make him realize the fact that, so far as heat was concerned, he could not both have his cake and eat it. The greater part of the energy was dissipated as radiant heat to the walls and furniture of the room, and it left comparatively little for the purpose of heating the air passing through the series of tubes which penetrated his stove.

If there be no great economic advantage, so far as the penetration of energy to the interior of the boiler is concerned, from the radiated heat from the glowing fuel, there is no reason why the coal should not be burned outside the boiler so that only the heat from the flame and from the flue gases should be employed for heating the boiler. There would not perhaps be much in this were it not that flame, *i.e.*, combustible gases in the act of combining with the oxygen of the air, in coming into contact with comparatively cold surfaces becomes extinguished. It is true that these gases may become reignited time after time as they roll along the surface of the plates, but some of them may finally be carried away to the chimney unburned, whilst the average temperature of the combustion must be lower than it would be if the combustion were at once completed. The difficulty of producing complete combustion

in any sort of flame might be illustrated by a series of experiments which I made (Brit. Assoc., 1890) by drawing the products of combustion from various forms of burners, drying the gases and absorbing and weighing the carbon dioxide, and then passing the resulting unabsorbed gases over red hot copper oxide in a combustion tube; thus completing the combustion of any carbon or hydrogen compounds which passed away unburned; and I found the remarkable result that only in one instance was complete combustion obtained, and that was from the burning of a paraffin oil lamp turned on moderately full—when the lamp was turned above or below this, unconsumed products were found in the gases which came away from the glass funnel. An ordinary Argand burner, burning with a clean cut flame, gave the next best result as regards complete combustion, but the gases coming away were not free from unconsumed products. Considerable quantities of incompletely consumed gases were found from the ordinary Bunsen burner and from the Welsbach incandescent burner, and a very large quantity from a stove filled with pipes; at the bottom of the chamber containing the pipes four open bat's wing burners were employed, the hot gases rising to the top of the chamber and then falling and passing away near the bottom to the chimney. This process may be very well employed in the analysis of flue gases, in which the water and carbon dioxide (carbonic acid gas) obtained after passing the previously dried flue gases, from which the carbon dioxide has been thoroughly removed, over red hot copper oxide, weighing the carbonic acid and water which are thus obtained, and stating the results of unconsumed carbon and hydrogen in terms of the carbon dioxide originally contained in the flue gases. Considerable quantities of unconsumed gases may thus be determined, which cannot be found by the rough and ready means that are to some extent already in use, by the Orsat apparatus.

This apparatus is, however, I believe, too little used by engineers in this country, for its constant employment would enable them to determine the most economical degree of circulation of air through the furnaces and flues of their boilers. More attention,

I believe, is given to this in America and on the Continent. When travelling in America, last year, I visited an establishment, and was surprised to see an aspirator constantly at work in the laboratory, drawing away samples of the flue gases from the main boiler flue. These gases were analysed from time to time, and the attention of the managers was drawn to the firing if the results of the analyses were not satisfactory.

If a much greater quantity of air be circulated through the flues than that necessary to produce complete combustion of the fuel, it is evident that a much larger quantity of the inert gas nitrogen, and unnecessary oxygen, will be heated up to a high temperature, and the initial temperature of the combustion will thus be lower than it should be, and as stated before, the heat generated at the lower initial temperature will not pass or circulate in such quantities into the boiler; and as all the air and gases which pass through the flue tubes of the boiler, must necessarily be at a lower temperature than would be the case if not much more than the exact quantity of air required for the combustion of the coal be used, it is obvious that a correspondingly less quantity of the total heat will pass into the boiler, by reason of the gases being at the lower temperature, and by the heat given to the unnecessary air being carried away uselessly to the chimney.

An ingenious apparatus is in use in Germany, invented by Arndt, called the "Ados" Automatic CO_2 Recorder. I am informed that upwards of four hundred of these instruments are in use in Germany and about twenty in this country which automatically take in and analyse the flue gases, and record the results of the analyses in percentages of carbon dioxide by lines of greater or lesser length every few minutes. If together with the records of this apparatus, the temperatures behind the boilers could be also recorded, a good basis would be obtained for improving the conditions for the combustion of coal and producing great economy in its consumption. Most manufacturers have got into the way of paying coal bills, and they erroneously do not imagine it to be possible to carry on their factories at less cost so far as coal is concerned.

The air is composed, roughly speaking, of 21 volumes of the active gas oxygen and 79 parts of the inert gas, nitrogen. It is a curious fact that if pure carbon be burned in air or oxygen, it combines with the oxygen, and forms exactly the same volume of carbon dioxide as the oxygen, with which it combined, previously occupied. There is, however, in coal a certain amount of hydrogen and sulphur in combination with iron which burns, the hydrogen combining with oxygen to form water which condenses, and ceases to exist in the cooled flue gases. The iron, in combination with the sulphur, fixes some of the oxygen which is left in the ash as oxide of iron whilst the sulphur combines with the oxygen forming sulphur dioxide, and most of the sulphur dioxide gas is also removed in solution in the condensed water, so that if flue gases from a coal furnace be analysed one never finds 21 volumes of carbon dioxide present; the maximum would be about 18 to 19½ per cent. with no free oxygen, depending on the kind of coal employed, *i.e.*, on the proportion of combustible hydrogen and sulphide of iron present in the coal. I say combustible hydrogen because, as you are aware, a considerable amount of hydrogen exists in coal already in combination with oxygen, which does not combine with the oxygen of the air, Thus dry wood is composed of less than one-half its weight of carbon, and more than one-half its weight of hydrogen in combination with oxygen, so that the total heat derived from the burning of wood is equivalent to that which would be obtained by the burning of less than one-half its weight of pure carbon.

Flue gases should contain from 13 to 18 per cent of carbon dioxide without carbon monoxide or free hydrogen or hydrocarbons, but the percentage of the carbon dioxide forms a very fair criterion of the velocity of the circulation of the air through the furnace. I have found in many flue gases not more than 5 or 6 per cent of carbon dioxide, and some as low as 1½ to 2 per cent. For the benefit of those who have not previously worked the Orsat apparatus, I propose to show it in operation afterwards. If the average proportion of carbon dioxide in the flue gases be known,

and the percentage of carbon in the coal and weight of coal burned in a given time be known, the velocity of the circulation of the air through the flue may be readily calculated, and if the average temperature of the flue gases as they leave the boiler be determined, the total loss of heat may be calculated. The ordinary, or the improved nitrogen-mercury thermometers cannot be used as a rule, for regularly determining temperature in flue gases near the boiler, and it is only recently that improved electrical thermometers, suitable for practical purposes, have been devised by Professor Callendar and Dr Griffiths of Cambridge, one of which I have here for inspection by any of the members at the close of the meeting. The recorder may be used in the office so that at any moment the temperature of the flue gases from any boiler may be determined, or one may be attached to an automatic recorder, devised by Professor Callendar, and a continuous diagram of the rise and fall of temperature during the 24 hours may be obtained.

I have also put on the table an instrument, devised by myself many years ago, for determining the calorific value of coal by burning it under water in a current of oxygen. If the calorific value of an average sample of the fuel be determined by it, it is possible from the temperature data above-mentioned, taking the specific heat of the flue gases into consideration, to calculate the amount of heat which has been passed into the boiler and the amount which is carried to the chimney in the flue gases.

An apparatus, devised in its original form by Edward Makin, with which I have been experimenting for some years, has shown itself capable of greatly increasing both the circulation and combustion of the gases in the flue, also of the circulation of the water in the boiler and effecting great economy in coal, and I propose to bring it before you for your consideration and criticism.

It consists of a hollow walled cone, or of a series of such cones, each fixed to the bottom of the iron flue of the boiler by a steel tube, and connected with the top by means of another steel tube.

These cones are shown in a sectional drawing of the flue tube, the first cone being also partly shown in section, Figs. 1 and 2. The cones thus fixed are placed nearer the top than the bottom of the flue-tube of the boiler, and the sizes of the air openings through the cones increases from the front backwards.

Usually five of these cones are fixed in each flue of a Lancashire boiler behind the fire bridge. They are thus set in the flue on the injector principle. A large volume of flame passes through the centres of the cones thus placed, and part sweeps round the sides; thus both the inside or front face, and the back of each cone becomes enveloped in flame, with the result that all the sides of the conical rings act as heating surfaces to the water contained within their hollow walls, whilst the ribs or gills of projecting metal become more highly heated than the rest of the cone and prevent the extinction of the flame as it passes through them.

The action of these appliances on the circulation of the air through the flue is most remarkable. When they have been working in a boiler for some time, if the fire be raked out and a bundle of cotton waste, saturated with oil, be attached to the end of a long iron pipe or rod and the oily waste ignited and pushed near to the front cone, the flame rushes violently through the centres of the line of cones producing a roaring noise; and the white flame simultaneously becomes a blue one, because the air enters from all sides of the flue tube between the cones and mixes thoroughly with the column of flame passing through them, producing what appears to be perfect combustion. When the flame and hot flue gases have passed through the cones they rise to the higher surfaces of the flue tube and impart their heat to them in the ordinary way.

In the usual practice of firing, the flames and very hot flue gases usually pass along the higher, whilst the unconsumed air passes along the lower parts of the flue tube without commingling. When these cones are employed the lower strata of unconsumed air are again drawn into the column of flame which passes along the centres, because the cones are so set that the back or narrower end

of the first cone projects into the wider end of a larger cone set immediately behind it; the third cone is similarly placed and is larger than the second and so on to the fifth cone.

These appliances have the further remarkable effect of increasing the circulation of the air through the flue of the boiler, in other words, increasing the draught. When a patent was applied for in Germany it was refused on the ground that the cones would block the draught, and finally two of the German officials came to England and spent three days studying the working of a boiler, with and without these cones; they reported that the draught or circulation was increased by them to a large extent, and the German patent office officials were then satisfied that a new principle had been discovered and they granted the patent.

This peculiar quality was discovered when the first set was fitted to a boiler; before their application a by-pass flue had been used which was always left full open, so that the damper had rusted in such a way that it could not be moved. After the cones were fitted it became necessary to break away the rust and close the damper completely, to avoid the excessive draught which was produced.

Transmission of Heat from the Furnace and Flue Gases to the Interior of the Boiler, and Circulation of the Water therein.

In boilers of the Lancashire type and also in marine boilers, as the top surface of the flues or combustion chamber is the most effective heating surface, it is obvious that the water in the boiler near the surface will become heated more quickly than that at the bottom, and as hot water is lighter than cold, there exists no tendency for them to mix, and this is most marked in the initial heating from the cold water. This results from the want of circulation of the water in the boiler and it produces severe and sometimes serious strains on the rivets and plates of the boiler, especially on those plates which are partly in the cold and partly in the hot region. Such strains, although more severe in the

initial heating of the cold water, are still considerable during the constant working of the boiler, especially where there is considerable alterations in the working pressure, and consequently in the temperature. Various methods have been tried for bringing about vigorous circulation in shell boilers but most of them have proved unsatisfactory.

The Galloway tube, as used in the Lancashire and Cornish types of boilers, is the one which has been most employed and there is no doubt that this device has considerably improved those classes of shell boilers. As the crown of the flue tubes in these boilers offers the best heating surface, experience has developed the Galloway tube into a conical form with the apex cut off, the narrower end of the conical tube being fixed in the lower part of the flue tube and the wider end near the top surface of the flue, thus the flame together with the hotter and therefore lighter flue gases meet a greater surface of tube at the top and therefore more heating surface is offered to them. The tubes of the Stirling boiler also produce circulation to a certain extent, but all tubes intersecting the flue-tubes have this disadvantage that, only the front halves of the tubes act as heating surfaces, the other half of each tube receiving only a comparatively small quantity of heat.

According to Professor Osborne Reynolds, the heat carried off by any fluid from a surface is proportional to the internal diffusion of the fluid at and near the surface, *i.e.* proportional to the rate at which particles or molecules pass backwards and forwards from the surface to any given depth within the fluid, so that a surface against which the fluid is constantly flowing will make a much better heat collecting surface than one against which the fluid is comparatively stagnant.

The cones to which I have called your attention possess this advantage in a marked degree, because there is a constant flow of water through them, which rises 10 or 12 inches above the surface of the water in the boiler. This produces large economy of fuel. In experiments made with model boilers fitted with cones, as compared with models fitted with plain tubes, the advantage in

favour of the cones was about 30 per cent., but in actual practice the per centage of advantage has seldom reached so high a figure.

As such a large jet of water is constantly projected from the tubes of the cones which are cut off near the top of the flue tube, it is evident that the force generated within the cones, is sufficient to propel this stream of water against the pressure of the column of water lying over the flue tube to a depth of from 12 to 18 inches. It occurred to me recently that if a pipe were fitted into the top tube of each cone, as shown in the diagram, so as to bring the weight of the whole height of the water in the boiler to assist in the circulation, that a still better result as regards economy of fuel would be produced, and this has proved to be the case. I give later the results of practical tests made to determine these points, by which you will see that one boiler was tested and then fitted with cones, the top tubes of which only penetrated the top of the flue tube; this gave an advantage in economy of coal of 15·8 per cent. When, however, tubes were inserted into the top of the upper cone tubes and brought into the steam space, the economy was increased to 29·75 per cent. over that produced by the plain boiler containing Galloway tubes, several of which were cut out to make room for the cones.

So great is the circulation produced by these cones that firing may be vigorously carried on when the boiler is filled with cold water, the top and bottom of the boiler becoming simultaneously equally heated.

There is another interesting fact connected with the working of these cones, and that is that they superheat the steam in the boiler. In the numerous tests which have been made of these appliances, where the steam was allowed to escape at the manholes, the steam from the boilers fitted with cones came away transparent for several inches from the manhole, whilst it came away white from the edge of the manhole of the ordinary boilers.

One or two attempts have been made to fit these cones into the combustion chamber of the Scotch marine boiler, but the conditions of these special boilers were not such as to allow this to

be done. It is believed, however, that they may be fitted to some marine boilers, and it is anticipated that with a long exit pipe from the upper cone tubes into the steam space, very efficient circulation and great economy will result from even one or two cones.

It would naturally suggest itself that with very hard waters the cones would soon become blocked with incrustation. They have, however, been at work for over a year with exceptionally hard waters without shewing more than a very thin scale near the top of the exit tube, which was quite friable and could easily be removed. The passage of the water through the cones is so rapid that it appears to keep them free from incrustation. There have, however, been a few cases under quite exceptional circumstances in which they have become blocked, in one, for instance, where water containing woollen fibres was used, and in another where the boiler itself got nearly blocked up with mud and refuse.

Fitting the Cones.

It might be interesting to you to know how these cones are fitted into the flue tubes, and the method which has been adopted is shown in Fig. 3. Two copper bushes are taken curved to the boiler plate on one side and level on the other. Each bush is grooved all round on the level side. One of these fits over the steel screwed tube of the cone, under which is a malleable iron nut with a projecting piece to fit into the groove n the copper bush, the nut is screwed up and pushes the bush into position on the under side. The other bush is put over the screw tube on the upper side of the flue-plate and another nut put over it, which is screwed down from the top. The circular wedge projection on the iron nuts press the bushes home and opens out the copper bush so as to imbed it firmly from both sides into the edges of the flue-plate.

The two circular holes, about 5 inches in diameter, are cut in the flue-tube by a ratchet brace and cutter worked from the inside of the boiler. When the upper hole has been made it is fitted with a bush and an extension bar which goes through it, and the bottom hole is cut so that the two holes are truly opposite to each other.

It is remarkable in this joint that out of several thousands which have been made by ordinary workmen, no leakage has ever taken place in any of them.

In the model boiler before you, with glass sides in which the flue tube is fitted with cones you will see with what force the water is projected from the cones when a flame is applied to them. It is easily forced to a considerable height up the glass tubes loosely fitted into the upper cone tubes from the level of the flue-tube in the model boiler.

The following are the results of evaporative tests made on a Lancashire boiler 18 feet long by 6 feet 3 inches in diameter; with a working pressure of 60 lbs. per square inch; using Russell's coal:—

No. 1 Test.—Before the cones were fitted.

No. 2 Test.—After 10 circulating cones had been fitted.

No. 3 Test.—After 10 tubes had been attached to the 10 upper tubes of the cones.

	No. 1.	No. 2.	No. 3.
Date, - - - - - -	6/2/02	8/4/02	9/12/02
Duration of all the tests, - - -	4 hours.		
Total heating surface (square feet),	445	525	525
Total coal burned (lbs) - -	871	728	725
,, ,, ,, per hour (lbs.),	217·7	182	181·2
Total coal burned per square foot of grate area, - - - - -	8·1	6·7	6·76
Total water evaporated (lbs.), -	5760	5580	6210
,, ,, ,, per hour (lbs.),	1440	1395	1552
Lbs. of cold water per lb. of coal,	6·6	7·3	8·56
Average steam pressure (lbs.), -	48·5	53	52·9
Average feed temperature (Fah.),	160°	160°	160°
Advantage over plain boiler, -	—	15·8%	29·75%

The following table gives the comparative results from a Lancashire boiler, with and without cones, but without tubes leading from the cones into the steam space.

Appendix.

Fig. 4 shows the Orsat apparatus, which is a very convenient one for the analysis of flue gases.

D is a three-way glass tap fixed at the end of the narrow inlet glass tube leading to the measuring tube A. The glass cross-head of the tap has a black spot on one side.

When the tap is turned parallel with the glass inlet tube, with the black spot facing either upwards or downwards, the measuring tube is put into communication with the tube passing to the flue. When it is turned at right angles to the measuring tube, so that the black spot faces the measuring tube, that tube is put into communication with the open air through the projecting end of the tap which is perforated along its length. When the tap is turned at right angles, so that the black spot on the cross-head faces the tube going to the flue, the projecting end of the tap is open to the tubes coming from the flue. This is the position in which the tap should first be placed. The India rubber tube from an India rubber ball aspirator should be attached to the end of this projecting tap and worked so as to remove any air from the pipes through which the flue gases have to pass.

This tap, without detaching from its end the India rubber aspirator, should be turned parallel with the inlet glass tube, and the brine bottle B should be simultaneously lowered. The brine will fall from the measuring tube into the bottle, and the flue gas to be analysed will enter the measuring tube (surrounded by a water-jacket for the purpose of keeping the temperature constant). The tap at the end of the entrance tube must be kept open till the level of the gas in the measuring tube stands at O, and the level of the brine in the bottle is the same as that in the tube, the bottle being brought close up to the measuring tube. When this has been adjusted, the glass tap D is turned to an angle of 45° to the

E Cones) and Tested Before Fitting.

	EASY STEAMING	
	Before Fitting Cones.	After Fitting Cones.
Da	22/7/01	11/9/01
Du	4 hours	4 hours
Nar	—	—
Tot	1046	1146
Tot	3105	2860
	776·2	715
	17·7	16·5
Tot	18,749·0	20,573·3
	4,687·2	5,143·3
Lbs	6·03	7·19
Ave	90·8	81·7
	66°	58°
	0·41	0·39
Ash	276	—
Sav	—	19
Ana		
	6·86	10·53
	6·86	4·73
	85·28	84·74
	100·00	100·00
Calc		
Fah	12,855	12,707
Wat		
c	13·32	13·17
Wat		
c	11·50	11·38

All orate the water from 60° Fah. in the the results of these calculations :—

Uni		
thermal Units—		
f	1,149	1,155
Tota		
h	39,914,775	36,342,020
Uni	21,454,702	23,762,162
Tota		
a	18,460,073	12,579,858
Perc		
E	53·75	65·38
Perc		
E	—	21·64

inlet tube and thus closed, and the sample of gas then submitted to analysis.

The first and chief operation is to remove from the gas the carbon dioxide present in it and to measure the loss; this is done by raising the bottle and opening the tap E. The gas will gradually enter the pipette F, displacing the caustic potash solution which surrounds the thin walled glass tubes which fill the pipette and which offer more surface of liquid to the gas. After a few minutes the brine bottle is taken in the right hand and gradually lowered, whilst the tap E is again opened, and this time the unabsorbed gas will repass into the measuring tube. As soon as the liquid rises to the narrow tube at the top of the pipette the tap E is turned off (care being taken not to allow any of the liquid to come up to the stopper). If this takes place, the stopper must be removed, and any potash solution carefully washed from it and the cavity for the tap also well cleaned; the stopper should then be lightly smeared with vaseline and re-inserted, and when the apparatus is left, it should be observed that the taps are well covered with a thin coating of vaseline, otherwise they are liable to become fixed and the apparatus rendered useless.

When the tap E has been turned, the level of the liquid in the brine bottle is brought to the same level as the liquid in the measuring tube, and the figure on the measuring tube corresponding to this level is the percentage of carbon dioxide in the gas analysed. To make certain that all the CO_2 has been removed the operation may be repeated.

The gas remaining in the measuring tube may, in a similar manner, be passed into the pipette F_1 filled with a solution of pyrogallic acid and potash, which will absorb the free oxygen; the difference between the first and second reading on the measuring tube gives the percentage of free oxygen.

The gas then remaining may be passed into the pipette F_2 which absorbs the carbon monoxide, these operations must always be made in the order mentioned herein.

Discussion.

Mr SINCLAIR COUPER (Member) was inclined to think that the title which Mr Thomson had chosen for his paper was somewhat misleading. Mr Thomson said he wished to treat the title on the broadest possible lines, and to embrace, not only the circulation of water, but also the movements of air, heat, and flue gases in connection with shell boilers. Now these movements were not peculiar to shell boilers; they took place in every steam boiler, whether it was a shell boiler or a tubulous boiler. In the latter for example—any well-known type of water-tube boiler would do—they had the mixture of air with the fuel, the consequent combustion of the fuel resulting in the production of large volumes of gases which circulated among the tubes and flues; there was the transmission of heat through the walls of the tubes and the circulation of water and the movement of steam bubbles within the tubes and other portions of the boiler. The resultant problems for consideration were, therefore, the same for all types of boilers, and while the title might be intended as a means of introduction for the latter part of the paper, still, he thought the questions involved were so interesting and important in themselves that he would like to have seen them dissociated from a description of any special apparatus. However, he was glad to see a paper on any boiler question and to have an opportunity of discussing it, and he hoped that as Mr Thomson had placed on record the results of his investigations they might be followed by something else from him in the future. Taking the subject of the combustion of fuel, referred to in the third paragraph of the paper, this was very much complicated by the fact that one pound of coal, although it theoretically required only from 10 to 12 lbs. of air for its combustion, actually required in practice a very much larger quantity, even as much as from 30 to 50 per cent. over the theoretical amount. The theoretical amount was only possible when coal was burned on a very small or experimental scale and could not be achieved in ordinary boiler practice. Many boilers were working well with from $1\frac{3}{4}$ to twice the

theoretical amount of air necessary for the fuel which was used in them. The result was that a volume of flue gases far larger than Mr Thomson indicated had to be dealt with, and if this greater amount could even be regulated the problem would not be so difficult; but the quantity of air admitted was constantly varying, and in many boilers it must be tremendously in excess of what it should be, thereby diluting the gases of combustion, lowering the temperature, and reducing the efficiency of the boiler. Other boilers, again, were working with an insufficient supply of air which resulted in defective combustion, black smoke, and inefficient heating surface. In both cases, and from every point of view, the result was loss to the steam user. He agreed with Mr Thomson in recommending that the only way to ascertain the condition of things in a given boiler was to analyse the flue gases going to the chimney, and this could be readily done by one or other of the instruments now to be had for determining the composition of those gases. The percentage of carbon dioxide in the gases leaving a boiler gave a true indication of whether too much or too little air was being admitted to the furnaces, and steam users should consider the fact that about 8 per cent. more coal was burned if the percentage of carbon dioxide was 9 per cent. instead of 15 per cent. The chief object indeed in all boiler stoking should be to make as much carbon dioxide as possible and as little carbon monoxide. There was certainly a great difficulty in regulating the supply of air when furnaces were fired by hand, but even with them care and intelligence would reduce the losses. The experiments of Mr Spence* showed what could be done by hand firing. He made eleven experiments on a boiler, hand fired, and with different quantities of air varying respectively from 12¼ lbs. to 18½ lbs. per lb. of coal, when the boiler efficiency rose from 65 per cent. with the former to 73 per cent. with the latter. He then made further experiments with the same boiler, using forced draught and increasing the amount of air from 18½ lbs. to 27 lbs.

* "On the Combustion of Coal" by W. G. Spence. Proceedings of the North-East Coast Institution of Engineers and Shipbuilders. 1888.

Mr Sinclair Couper.
per lb. of coal, and he got his best result of 75¾ per cent. efficiency when supplying 20 lbs. of air per lb. of fuel. In his last series of experiments the air was heated to 250° Fah.; forced draught was used, and again 20 lbs. of air per lb. of coal gave the highest result, which was 78½ per cent. efficiency. These tests were all made on the same boiler with the same quality of coal, and the same stoker acted throughout the whole of the 27 experiments. Mr Spence's paper was well worth the consideration of every engineer and every steam user. Mr Thomson referred to the transmission of heat and to the relative values as heating agents of the direct action of the flame striking the surfaces of a boiler plate and radiated heat from incandescent fuel. It was probable that the luminous flames from a fuel like bituminous coal would act as heat radiators in a furnace, but incandescent fuel itself radiated heat and examples of that obtained in boilers where gas-coke was used instead of coal. With a coke fire there was practically no flame, and although it was not considered a very good fuel, still, in many cases, it was used, and was found to have a definite value as a heating agent. Many people made the mistake of thinking that one type of furnace was suitable for all kinds of fuel. Many firegrates, he thought, were placed too close to the plates or tubes above them, and better results would be got by lowering the grate and admitting more air above the fire than was usually allowed. Air also should be admitted at the bridge, and the result would be better combustion, with an absence of smoke and an increased economy to the steam user. Along with a knowledge of the analysis of the flue gases it was essential to know their temperatures. It was amazing to find how the temperature was lowered in a combustion chamber, for instance, if the furnace doors were left open, which was a favourite way of giving an excess of air. Reliable pyrometers were now easily obtained, and any one could use them and for himself test what was going on in his boiler. On the table were examples of Mr Alexander Hill's pyrometers, made in Glasgow by Messrs Baird & Tatlock. One was of the thermo-couple type, having one of the two

wires composing the couple of platinum, while the other was platinum alloyed with 10 per cent. of rhodium. Such a couple gave an electric current when the junction was heated, and this current was sent through a galvanometer which had a calibrated scale, above which the needle travelled and indicated the temperature. The advantages of this instrument were its extreme portability and convenience for use; being swung on gimbals like a compass it required no time or trouble to set it up level, and lastly its moderate cost placed it within the reach of every steam user. Two other forms of this pyrometer were shown, one of the fixed type for placing in the office at a distance from the boiler, with wires led to it conveying the current, so that the temperature might be observed from a distance. The other was a recording pyrometer by means of which a continuous diagram of the temperature might be registered over a period showing the variations which take place from time to time. Referring to Makin's flue cones, which Mr Thomson described, he would like to point out that the flue of a Lancashire or a Cornish boiler was its combustion chamber, and, as such, it was very ineffective for the proper mixture and combustion of the gases which had come over the bridge from the furnace. Remedies had been sought in many directions with the view of removing this defect. Some people had put brick walls in the flues; others had tried firebrick cones; while others had put in tubes of different designs and at all angles, the object in every case being to intercept and break up the volumes of gases which passed through the flues, and also with the object of increasing the circulation of the water within the boiler. Perhaps the most successful of any device had been the conical tube introduced by Galloway, yet, from the troubles which arose with every contrivance in such a position, the tendency now was to return to plain flues without any obstructions in them, and many Lancashire boilers were now specified without conical tubes. If any benefit arose from the use of Makin's cones, it would likely come from the breaking up of the volume of gases passing through the flue, thereby utilizing the heat to better advantage from a given

Mr Sinclair Couper.

quantity of fuel. That seemed to be borne out by the tests which Mr Thomson gave, the gain being shown in the reduced consumption of coal, with no increase of evaporation per unit of heating surface. In the trials with Mr Thomson's boiler, the rate of evaporation per square foot of heating surface without the cones was 3·23 lbs. of water; while with the cones it was reduced to 2·65 lbs., and when the cones had discharge tubes attached to them it was still only 2·95 lbs. The results of trials with and without the cones, with the Lancashire boiler, gave a similar result, but as Mr Rowan and Mr Matthey had already referred to this matter in their remarks (see correspondence), he would not allude to it further. He did not think that any of the trials, results of which were given, were at all conclusive. This brought him to ask what was the advantage of the apparatus as a water circulator, because that was not clearly shown anywhere in the paper or in the tables. He thought the temperature at the bottom of the boiler and the temperature at the surface of the water should be given when the fires were kindled and the boiler started from cold water, with readings at intervals thereafter for a period of 36 hours, so that the true value of the apparatus might be shown. In boilers, as in business, a thing was considered good when it could be seen through, but the present construction of the cones precluded the possibility of internal examination. He did not see how the passages within the cones could be examined or kept free from incrustation if the feed-water contained any salts or deposit, which would be liable to adhere, no matter how rapid the circulation might be. He remembered some two years ago looking into the matter of these cones and was much struck by the simple and effective joint by which they were connected to the flues. It seemed to give complete satisfaction and nothing could be simpler or more readily made. The drawback to all fittings placed in the flues of boilers was that they impeded free examination and cleaning of the flue, whereby they themselves soon became inefficient, and defeated to a great extent the very objects for which they were fitted.

Mr E. Hall-Brown (Member of Council) said his impressions on

Mr E. Hall-Brown.

hearing the paper read were pretty fully expressed in the remarks by Messrs Rowan and Matthey and those of Mr Sinclair Couper. He was somewhat disappointed with the paper. It might be that his ideas of fluid circulation in shell boilers were different from those of the author, and consequently he had expected a somewhat different paper. He could see very little connection between the preliminary remarks and what followed in the second part of the paper. One thing was very clear to him, and that was, that no matter what shape of body was placed in the flue of any boiler the draught could not be aided thereby. There could be no such action as an injector action due to such a cause. There was no similarity between the steam and water in an injector, and the flue gases that were passing through the flue of a boiler, and any body placed in the flue, no matter what its shape might be, must be an obstruction to the draught. That, he thought, went without saying, but there might be countervailing advantages. The increased surface or increased efficiency of the surface might make up for the loss of draught, but there could be absolutely no gain in draught, nor was there any such gain shown in Mr Thomson's tables. His only excuse for speaking at all was to emphasize that fact. As he had stated, there might be a gain from the use of the rings due to the increased heating surface of the boiler, but there did not seem to have been. The tables given were very incomplete, and not at all such as could be accepted as a record of scientific experiments, but even if accepted as reliable, they did not show a clear case of gain for the circulating rings, either from the point of increased evaporation or from that of increased draught; in fact the draught recorded was distinctly less with the rings fitted than without the rings, which was exactly his contention. It might not be safe to argue from the chimney draughts recorded in the paper, as one did not know at what point of the flue these draughts were taken. He wished however to be quite clear on one point, namely, that whether recorded or not, there must be less draught at the furnaces with these rings fitted than without them, other conditions being the same.

Mr John Sime.

Mr JOHN SIME (Member) observed that the question was: Could increased draught be produced by these cones? Mr Hall-Brown said there was no analogy between the application of the principle here and that applied to injectors. He would take the risk of the arguments propounded by Professor Macquorn Rankine, Alexander Morton, and others in experimenting with "Ejector" condensers, injectors, water-lifters, etc. They got a very much increased induction by applying *vena contracta* or conoidal nozzles; more than they would by applying nozzles with parallel surfaces. He supposed that applying the same principle to boilers with either forced draught, or natural draught by the induction produced from a chimney, the same action ensued. The Germans seemed to be impressed with that idea, because Mr Thomson had said—"When a patent was applied for in Germany it was refused on the ground that the cones would block the draught, and finally two of the German officials came to England and spent three days studying the working of a boiler, with and without these cones; they reported that the draught or circulation was increased by the cones to a large extent, and the German patent office officials were then satisfied that a new principle had been discovered, and they granted the patent." He did not think there was any new principle, but the application of that principle in a particular manner to boilers might have been new. He would like to hear the practical views of some of the engineers who had had experience on that point. The only other matter that he would like to refer to was the remark about Professor Osborne Reynolds, where Mr Thomson said—"According to Professor Osborne Reynolds, the heat carried off by any fluid from a surface is proportional to the internal diffusion of the fluid at and near the surface, *i.e.* proportional to the rate at which particles or molecules pass backwards and forwards from the surface to any given depth within the fluid, so that a surface against which the fluid is constantly flowing will make a much better heat collecting surface than one against which the fluid is comparatively stagnant." In applying this to cones, the heat of the gases passing through the cones was communicated to the

water within them and produced circulation up into the steam space, and that circulation was continued round and through the body of water to the lower part of the boiler; and Mr Thomson had shown that from the application of the cones he had got a result showing at least 30 per cent. in economy of fuel. A good many engineers were now going on the lines of making ordinary shell boilers with divisional application of the heat; that was to say, at spaced distances apart along the boiler. Mr James Howden had been working for some time on circulation of water by taking the heat from the gases themselves. In an ordinary Lancashire boiler he fitted pockets at certain distances apart, extending from the flue considerably up into the steam space, and in the case of marine and other boilers on the top of the combustion chamber. These pockets were closed at the top end and open below, so that the fire gases passing through the flue or combustion chamber gave off their radiant heat into the pocket chambers, and thus increased the circulation of the water and superheated the steam in the steam space.

Mr HALL-BROWN was afraid he had not made himself quite clear. Why he said that there was no similarity between the action of these rings and that of an injector or ejector, was that in the latter case a fluid moving at a high speed was used to impart motion to another fluid moving at a lower speed. The shape of the injector influenced the efficiency of the apparatus, but the result was due to the employment of fluids at two velocities, the speed of the resultant flow being less than the greater and more than the lesser of the two speeds. In a boiler flue the conditions were in no way similar, and the utmost result that could be attained as regarded the movement of the gases, would be a more complete mixture of the gases together with a reduction of the average speed of flow, or, a reduction in the draught due to the friction caused by the presence of the rings.

Mr R. T. NAPIER (Member) observed that the author's cones were, to begin with, an addition to the heating surface of the boiler, but, as the weight and cost of these were certainly greater

Mr R. T. Napier.

per square foot of surface than an ordinary flue, it remained to be shown that such additional weight and cost could not be as well applied otherwise. Regarding the entering air, it was of the first importance that this should be mixed with the hot combustible gases as quickly as possible. Galloway tubes helped this by causing eddies in the flue, and the author's contrivance would do the same, and perhaps better. The proposal to apply such cones to a marine boiler was on quite a different footing, as the parts of such boilers that gave most trouble, namely—where the upper parts of the flues were connected to the back tube plates—dare not be made more inaccessible than they were by any such encumbrance.

Mr JOHN REID (Member), remarked that large claims had been made regarding the fuel economy to be derived from the adoption of this special apparatus in boiler furnaces, and if Mr Thomson could substantiate those claims, they would certainly interest all classes of steam users. Every-one more or less took a deep interest in the economical working of his boilers, especially during the last few years when coal had reached such phenomenal prices. The question had been raised whether these cones created an injection action on the draught. He was not sure that he had followed the discussion on this point very accurately, but it seemed that if these cones increased in diameter along the flue, then something of the kind might be expected. It seemed to him also that the circulation of the gases might be concentrated or short circuited through the cones, and that this might explain certain of the results Mr Thomson had arrived at. Mr Thomson had claimed by the use of these cones that a saving in fuel might be effected of 30 per cent., but that seemed a pretty large order. Steam users would be glad to avail themselves of any appliance which would obtain with certainty such a saving; and if even a small proportion of this 30 per cent. could be depended on, Mr Thomson might look for a wide extension of his appliance. He thought, however, that any adoption of these cones in a marine type of boiler was quite impracticable. In the type of boiler shown in the diagram on the wall, the fitting might be possible, but with

corrugated or ribbed flues the difficulties in the way of making a satisfactory joint would be serious. Mr Sinclair Couper had remarked that the joint attaching the cone to the flue-plate was a very good one, and Mr Thomson seemed satisfied that it served its purpose, but he could not help thinking that a screwed joint under these circumstances must prove a source of trouble. Mr Thomson had made one or two references to German methods which were distinctly worth attention. If the Arndt CO_2 recording apparatus was as efficient as described, it was surely expedient that, even if made in Germany, it should be adopted at a greater rate in this country than seemed to be the case. The reference to the methods of German patent office officials was still more noteworthy. Two German officials, accordng to Mr Thomson, had come over to this country and spent three days examining and testing a boiler. Was it conceivable that English patent office officials would adopt any such course? He would like to ask Mr Thomson, what the effect of these cones was upon the smoke produced, and if there was any diminution in that direction? He thought that in a rough and ready way a great deal of information as to the efficiency of combustion could be derived from a study of the chimney-top.

Prof. W. H. WATKINSON (Member) said that there were one or two points which he thought it was worth while to draw attention to. On page 139, Mr Thomson said, "After the cones were fitted it became necessary to break away the rust and close the damper completely, to avoid the excessive draught which was produced." The question he had to ask regarding that was: How was this excessive draught manifested? Was it judged simply by looking into the furnace? because in the table given opposite page 144, the draught stated was lower in both cases after the cones were fitted. In the first case, with hard steaming, it was 0·56 before fitting cones, and 0·54 after fitting cones. With easy steaming, before fitting cones it was 0·41, and after fitting cones 0·39. One other question he would like to ask was: How were the vertical tubes from the cones shown in the furnaces of a marine boiler fitted

Prof. W. H. Watkinson.

between the fire-tubes. Was a whole vertical row of tubes removed above each furnace in order to get these vertical pipes in position? If so, he thought the cones would reduce the efficiency of the boiler rather than increase it.

Mr WILLIAM J. WILSON (Member) said that Mr Thomson claimed for the use of the cones great economy in coal. This was a claim which had been made for many different types of apparatus fitted into the flues of Lancashire and Cornish boilers, and possibly justly when the trial had only been for a few hours; but he (Mr Wilson) had yet to learn that anything in the nature of an obstruction, fitted in the flues of a Lancashire boiler, be it Galloway or any other type of tube, would result in economy over an ordinary spell of working, which in the case of Lancashire boilers meant six months; the reason for this of course being that, the greater the obstruction in the flues, the more quickly they would silt up with flue dust. It would have been of interest had Mr Thomson given the result of tests taken after a boiler had been at work under ordinary conditions for three or four months, burning say from 15 to 20 lbs. of coal per square foot of grate, and not like the first example given by Mr Thomson, from 6·7 to 8·1 lbs.; a rate of combustion suitable perhaps for the domestic hearth, but certainly not suitable for a steam boiler under ordinary working conditions.

Prof. A. JAMIESON (Member) said he would confine his remarks to two points. Firstly, on page 135, Mr Thomson stated, "If together with the records of this apparatus, namely, the 'Ados' Automatic CO_2 Recorder, the temperatures behind the boilers could be also recorded, a good basis would be obtained for improving the conditions for the combustion of coal and producing great economy in its consumption." He quite agreed with this statement. Fortunately, the Callendar-Griffiths thermo-electric self-recording instruments would do this, without any inconvenience to the experimenter. Messrs Callendar & Griffiths had recently so improved the system of measuring and recording high temperatures (as first devised and advocated by the late Sir William C.

Roberts-Austin) that varying temperatures could now be noted at any convenient distance from the furnace or the flue, with an equal precision and rapidity to that of indicating the changes of voltage in electric lighting or power transmission circuits. In fact, he believed the time was not far distant, when engineers would thus be able to record with accuracy the rise and fall of temperatures in the cylinder linings of their reciprocating engines, during the admission, expansion, and exhaust of the steam. Such instruments should enable them to probe a little further into the causes and effects of superheating, initial condensation, wiredrawing, and re-evaporation of steam. He was glad to see that the local firm of Messrs Baird & Tatlock were now producing a thermo-electric pyrometer and sensitive galvanometer, which, from its construction and action—as described by Mr Sinclair Couper—should prove a handy and useful instrument for testing temperatures in connection with boiler trials. If Mr Thomson would place several accurate instruments of the kind just mentioned, not only along the path of the flue gases to the chimney, but also in the water inside the boiler, both below and above the flue, where the cones were fitted, and have a series of thoroughly systematic continuous trials made—extending over some 20 or 30 hours—then engineers would be better able to judge of the efficiency of those novel appliances. Secondly, he desired to draw attention to the liability of these cones to become inefficient through deposits from the boiler water. It was only the other day that in a review of his elementary steam book, *The Tramway and Railway World* had criticised him (the speaker) for illustrating and explaining Galloway cross-tubes, as follows: "The cross-tube is of no use as a helper of circulation, and it is such an obstruction to perfect combustion that it fills the flues with soot and destroys the efficiency of the heating surface." Now, as a matter of fact, he found, that both boiler insurance companies and leading land boiler makers were now discountenancing the introduction of Galloway cross-tubes; not only for the above stated reason, but also because with certain bad feed waters these tubes could not be easily

Prof. A. Jamieson.

kept clean and free from incrustations or detrimental deposits. Certainly, unless the circulation of water through the special cones and their to-and-fro pipes, as exhibited by Mr Thomson this evening, was ever so much more rapid than through an ordinary Galloway tube, they would have a much greater chance of becoming incrusted or perhaps completely blocked by such deposits. Mr Thomson had always been admired by engineers for his ingenious "Calorimeter or Fuel Tester," and if he would only take the trouble to have a thoroughly scientific and practical test of these cones during a sufficiently long time at several periods of say, three or four months apart, under different conditions of draught and feed water, then he would have their hearty congratulations should the results turn out to be thoroughly satisfactory.

Mr H. W. ANDREWS (Member) considered the matter which Mr Thomson had brought forward one of great interest. Like Mr Sinclair Couper, he had had no practical experience with these cones, but one naturally turned to the tables of the results that were obtained by their use for a measure of their efficiency, and these tables did not seem to be very informative or very conclusive. Mr Wilson had very properly referred to the extremely abbreviated time during which the tests took place, and he thought that any engineer who had had anything to do with the practical testing of boilers, would conclude that a four hours test was nothing more or less than time wasted, especially under conditions given on page 143. The first test appeared to be made in February, the second in April, and the third in December. Between these months there were probably great climatic changes, and it was quite possible that in temperature alone there might be a difference of 40 degrees. Other gentlemen had referred to the small amount of coal that was burned in the furnaces—8·1 lbs. per square foot of grate area. That was not a commercial consumption at all, being little more than banked fires, as they all knew, and the result obtained from burning such an amount was absolutely of no practical or commercial value. In making the tests of this or any other apparatus, the most difficult thing to be determined was the condition of the

fire at the beginning and at the end of the operation, and it was only by a fairly long test, and also by the consuming of a comparatively large amount of coal, that an almost certain error could be reduced to reasonable limits. If this were applied to No. 1 test—the boiler had 27 square feet of grate, and 27 multiplied by 144 equalled 3888 square inches. Supposing that the fires at the start were 5 inches thick, and an error of 1 inch was made at the finish (it was almost impossible to gauge nearer than an inch), the error would represent 3888 square inches by 1 inch thick, and that would equal 3888 cubic inches. At twenty cubic inches per pound this would equal nearly 200 lbs. of coal, and so, at a stroke, this would affect the result by 23 per cent.! Then the evaporation in any case seemed very small, and showed either a very defective efficiency of the boiler or a low calorific value of the fuel. The tests relating to the larger boiler were, perhaps, a little more full, but the four hours duration was an equally fatal objection. Professor Jamieson referred to Galloway tubes in his remarks. Well, the fact of any particular firm leaving them out proved absolutely nothing, and the boiler which had had its tubes choked up was simply an illustration of using water which was totally unfit for a boiler of any kind.

The CHAIRMAN (Mr James Mollison, Vice-President) said he would like to ask if the apparatus had been fitted to any marine boilers? If so, he had not heard of it. A good many years ago quite a number of ordinary marine boilers (particularly double-ended ones) were fitted with Galloway tubes in their combustion chambers, immediately at the back of the furnaces. It was, however, soon found that the introduction of those tubes rather detracted from the efficiency of the boilers, and led in most cases to their being taken out.

Correspondence.

Mr F. J. ROWAN (Member of Council)—Mr Thomson's paper consisted distinctly of two parts, the first dealt with theoretical considerations concerning combustion and the composition

Mr F. J. Rowan.

and movement of the gaseous products, and the second part, with the Makin's cones; but except in the remarks on the effect produced on the draught by the use of the cones, the two parts of the paper were not connected. In fact, a closer application of the theoretical part to the practical would result in showing some discrepancy between them. With regard to the remarks dealing with combustion in its chemical or physico-chemical aspect, nothing in the paper depended on the statement of the weights of coal and air entering into combination, but the quantity of air taken by Mr Thomson was that which was usually estimated as the equivalent for 1 lb. of carbon, not coal—in fact, it was frequently given as 11·57 lbs. of air per lb. of carbon. For 1 lb. of coal of average composition many authorities gave 12·2 lbs. as the minimum or theoretical quantity. He must say that he could not understand what Mr Thomson's object was in introducing the statement he made as to the conductivity of boiler plates, or, as he preferred to term it, "the power of heat to penetrate the plate." It had no connection, that he could see, with anything urged in favour of the Makin's cones, and was distinctly contentious matter. The statement as to "the square of the difference" rested upon a mistaken deduction from some remarks of Professor Macquorn Rankine, and on some, from this point of view, totally inadequate experiments by Mr Blechynden and Miss E. M. Bryant. Professor R. H. Smith had shown how Professor Rankine's formula was only what he intended it for, namely, a rough approximation to the rate of heat transmission in boilers, and the experiments referred to, bore no sort of resemblance to the conditions which were present in even ordinary steam boilers. He, for one, maintained that, at present, there was not sufficient evidence available to justify the formulation of any such rule. A more interesting point was raised by Mr Thomson's reference to the use of radiant heat from the incandescent coke rather than that of contact of the flame and hot gases, but, unfortunately, his own illustration seemed to point to a different conclusion, just as such experiments as those of Miss Bryant* had shown that a

*Min. Proc. Inst. C.E. Vol. cxxxii. *p.* 274.

higher rate of heat transmission was obtained by convection than by radiation, so that, whereas from 3820 to 8540 C.G.S. heat units per minute were obtained by radiation heating, the numbers rose to, from 4,700 to 16,050 units, when the hot gases were allowed to come into contact with the metal plate under test. Mr Thomson's own illustration, besides falling far short of the mark as to any similarity to that of a boiler furnace in the means employed for the production of the heat, really illustrated another point, which was, that radiant heat rays not only escaped equally in every direction, but could positively be reflected away from the surface, which, it might be hoped, would monopolize them by that very surface itself; so that there was little wonder that the air in the stove pipes was cold. It seemed to him that the proper use for the radiant heat was to increase the temperature of combustion, and, therefore, that of the flame and hot gases which were used to convey their heat, by convection, to the metal surfaces. He was in favour of increasing the temperature of combustion by other means also, such as carrying on combustion under increased pressure, and by this means ensuring perfect flame formation before the hot gases came into contact with the boiler surfaces. Mr Thomson's picture of flaming gases that had been extinguished by contact with comparatively cold surfaces becoming re-ignited, could only come true if they obtained sufficient heat from some other source to raise them again to the temperature of ignition, and if they still contained sufficient combustible elements without too large an admixture of CO_2. He did not think that any true parallel could be drawn between boiler furnaces and lamp flames, either of gas or of paraffin oil. For one thing, the conditions of the access of air, relatively to the composition of the fuel, were totally different, and the effort in a lamp was certainly *not* to carry on the combustion at as high a temperature as possible. So that he was disposed to borrow Mr Thomson's words in his tenth paragraph, and say—"there is no great economic advantage, so far as the penetration of energy to the interior of the boiler is concerned, from the radiated heat from

Mr F. J. Rowan.
the glowing fuel, and there is no reason why the coal should not be burned outside the boiler so that only the heat from the flame and from the flue gases should be employed for heating the boiler." Mr Thomson was quite right in his opinion as to the advantage to be derived from the constant use of such analytical apparatus as he had illustrated. There was, however, so large a variety of these instruments of precision in use, that this Institution might profit by having a paper passing them all in review before its members. Now as to the Makin's cones, he had seen them at work and believed that they exerted a decidedly beneficial effect on the water circulation in Lancashire or Cornish boilers. They provided a large proportion of additional heating surface, about 20 per cent. in one case and 10 per cent. in the other quoted, in the very best position for obtaining heat in the special circumstances of the firing of these boilers, and he believed it was to that fact, more than to any additional movement given to the water actually in the barrel of the boiler, that the increased evaporation was due. He thought, however, that the tendency of the advocates of these cones was to claim too much for them. For instance, Mr Thomson pointed out that the great advantage or special feature of the cones lay in what he called their "new principle," the "increasing the circulation of the air and gases through the flue of the boiler, or, in other words, increasing the draught." This point was referred to more than once, and there was no reason why it should not be the fact, but if it was, it could only be because these cones acted by concentration of the already existing current, just as the *vena contracta* of a steam jet did. Nothing had been added to the chimney, or to the force of air entering the fire, and as to the boiler flue, what had been added had been in the nature of an obstruction of the draught through it, unless the injector effect was produced. That being so, the draught must be concentrated in the interior of the conical rings, and, therefore, he was sceptical as to the flame sweeping round both back and front, and centres and sides of the cones. In fact, these cones were just water-tubes of a special—and for the circumstances, no doubt, a

specially good—section placed in the flue, and they must be subject, as far as their obstructing surface was concerned, to exactly the same conditions as were all other tubes intersecting the flue. There was, however, one peculiar feature about the performance of these tubes which did not tally with Mr Thomson's claim for them, or with his theoretical considerations at the commencement of the paper. That lay in the fact, that in the tests which were quoted, although the cones were said to produce a considerably accelerated draught, yet the quantity of coal burned per square foot of grate surface per hour, was much less with the increased draught, than without it. The opposite effect should have been produced, unless there were circumstances which were not recorded—such as delaying the firing in consequence of over production of steam. In the case of No. 2 test, on page 143, and in that noted in the second column of the table, such circumstances could not have been present, because actually less water was evaporated in a given time with the cones than without them, although more water per lb. of coal. He hoped Mr Thomson might be able to give some information which would clear up this point. With regard to the lengthening of the top tubes of the cones, his impression was that the improved result derived from that alteration was due to the steam being led directly into the steam space, and not forced through the water as before, during which process some of it was almost bound to be condensed, as the hottest water was certainly not that in the layer above the flue in the boiler. He did not believe that any of the boilers which threw up a large quantity of water into the steam space acted within a very long distance of perfection as regarded steam generation, but even that action was preferable to the one of forcing a comparatively small volume of steam through a large volume of water which must be at a lower temperature. It was not at all unlikely that the action of Galloway tubes would also be found to be improved by a similar lengthening process and for the same reasons.

Mr C. A. Matthey (Member) felt sorry to damp the enthusiasm

Mr C. A. Matthey.
of Mr Thomson, but practical men could not for a moment admit that the addition of the circulating cones to a Lancashire boiler would increase the efficiency by from 15 to 30 per cent. In good modern practice a Lancashire boiler without economiser should give from 60 to 70 per cent. efficiency, even 72 per cent. under specially favourable circumstances; but Mr Thomson's best result with the cones, in the 8 feet by 30 feet boiler, was 65·38 per cent., about the average performance of an ordinary boiler. By comparing this result with an abnormally and almost incredibly bad performance of the boiler without the cones, he showed the remarkable increase of efficiency which he claimed for the cones. He, in fact, left off where he should have begun; he should have started with a boiler showing an efficiency of at least 65 per cent., and then fitted the cones and found what economy resulted. He (Mr Matthey) would not be surprised to find a considerable increase, not only in comparison with a plain flue, but also in comparison with one fitted with Galloway tubes; but to claim impossible results was calculated to discredit what might really be a useful invention. He had been casting about to find a reason for the poor performance of both the 8 feet by 30 feet and the 6 feet 3 inches by 18 feet boilers in order to try and help Mr Thomson to solve the mystery, and the following had occurred to him as one possible explanation. The trial without the cones was necessarily made first, and the trial of the smaller boiler without the spouting cowls on the cones before the trial with these cowls. Now, if at the commencement all the brickwork were cold, a quantity of heat from the hot gases was lost to the boiler, and was spent in heating up the brickwork. The performance would be very poor, but every hour it would improve. Then after the cones had been fitted, the brickwork would have cooled somewhat; but if, as it was natural to suppose, a preliminary run of a day or more was made to see that all was tight before making the next trial, the brickwork would be much hotter during the second trial than the first, and a better evaporative performance would result. Then, after fitting the cowls, which

would not take much time, the brickwork might have arrived at its final temperature, and a still better result would be obtained. The best result with the cowls, namely, 8·56 lbs. of water evaporated from 160 degrees at 53 lbs. pressure, at the rate of 3 lbs. of water per square foot of heating surface, including the cones, or 3·5 lbs. excluding them, was, if the coal were of fair quality, quite an ordinary performance, and could be repeated by hundreds of ordinary Lancashire boilers all over the country. Taking the 8 feet by 30 feet boiler, the order in which the trials were made with the respective efficiencies was as follows :—

Without cones, hard steaming	—efficiency	47·31
Without cones, easy steaming	,,	53·75
With cones, hard steaming	,,	56·76
With cones, easy steaming	,,	65·38

Showing a progressive improvement which might have been, he did not say was, due to the time given to the brickwork to get hot. Of course all this was mere conjecture, but it would be interesting to know whether the first trial was made with cold brickwork, and what the conditions generally were with respect to temperature of flues. If the reason suggested for the bad performance were not true, then some other must be sought. The most reliable experiments were beyond all question those made by Professor Kennedy and the late Mr Bryan Donkin, and it would be interesting to compare Mr Thomson's results with those of these experimenters, choosing examples in which the conditions were as nearly as possible the same. In the hard steaming trials the water evaporated per square foot of heating surface of the boiler without cones was 8 lbs. ; in the boiler with cones, 6·5 lbs. This might be compared with a small Cornish boiler at the City and Guilds Central Institution, South Kensington, London, tried by Messrs Donkin and Kennedy, in which 7·43 lbs. of water were evaporated per square foot of heating surface. The efficiency was 61·8 per cent. Again in the easy steaming trials the evaporation was 4·35 lbs., without the cones, and 4·5 with them. Compare this with the

Mr C. A. Matthey.

trial of a Lancashire boiler at Messrs Bryan Donkin & Co.'s works, Bermondsey, in which the evaporation per square foot was 4·78 lbs., and the efficiency 67·6 per cent.; or with an elephant boiler at the works of Monsieur Scheurer-Kestner, Thann, Alsace, where the evaporation was 4·94 lbs. per square foot and the efficiency 65·5 per cent. As to the steam being superheated, he could not credit it. The rapid circulation of water through the cone would keep its interior surface wet; but even if it were granted that the steam could receive superheat in the cone, it would lose it again in the foaming mass of water with which it would be ultimately mixed.

Mr Thomson, in reply, stated that he must thank the Members for the candid criticism which they had given of the paper, and he thought it was an exceedingly good augury for the Institution that they gave such criticisms. It showed the Institution to be full of intellectual vigour. Exception was taken by Mr Sinclair Couper to the title of the paper on the ground that circulation of air, water, and heat, was not confined to shell boilers. That was true; he might have gone a step further and said it was not confined to boilers at all, but there were peculiarities in the circulation of shell boilers which did not obtain in water-tube boilers, and it was these peculiarities to which he had given his attention and which led him to bring this paper before them. Mr Sinclair Couper thought the subject should have been treated in such a way that it was "dissociated from a description of any special apparatus," but he might explain that it was the study of this special apparatus and the way in which it modified and increased the circulation of the air, water, and heat in the boiler which formed the foundation of his paper. He did not wish to convey the idea that coal could be burned in practice with the theoretical quantity of air, as suggested by Mr Sinclair Couper; that this could not be done was due to the difficulty, or rather impossibility, in practice of bringing the exact quantity of air necessary for combustion into intimate contact with the fuel and combustible gases, but it must be admitted that as practice

approached perfect combustion the more economically would coal be burned. Mr Rowan took exception to the theoretical quantity of 11·57 lbs. of air per lb. of coal, and explained that that figure represented the air required per lb. of carbon, and that 12·2 lbs. was given as the minimum theoretical quantity for coal. He thus assumed coal to be a substance of very definite composition, which it was not: anthracite, for instance, approached in composition pure carbon, whilst many coals contained from 2 or 3 to 15 or 20 per cent. of ash, and it was obvious that it might require a greater or lesser quantity of oxygen for its perfect combustion than he had indicated. The reference to the quantity of air required for perfect combustion had regard to the peculiarity of the action of the cones in giving more complete combustion, by their drawing the unconsumed air as it passed along the boiler tube flue into the column of flame which passed through the centres of the cones and which would, in ordinary practice, be carried away unconsumed to the chimney. It was true, as Mr Sinclair Couper stated, that the best results in practice were obtained by using probably 75 per cent. more air than was required by theory for complete combustion, but the modification of the circulation of the air in the flue tubes of the boiler, by the cones, considerably altered the conditions of the ordinary boiler and completed the combustion with a smaller quantity of air, and so increased the economy and efficiency of the boiler. Mr Sinclair Couper and Professor Jamieson referred to the temperature of the flue gases. The former stated that it was amazing how much the temperature was lowered by opening the door of the furnace. Some authorities contended that furnaces producing much smoke were more economical than those producing little or none, inasmuch as the incandescent particles of carbon as they passed along the boiler flue radiated a large amount of the heat into the boiler; but he thought it would be found more economical if the doors were opened immediately after each firing, by some of the mechanical contrivances at present in use, so that the more volatile products from the coal, which were given off for a minute or

Mr Thomson.

so after each additional fresh supply of coal was added to the fire, should be supplied with a greatly increased quantity of air to complete its combustion. In observing the temperature of flue gases it was always necessary to take into consideration also the volume of gases which was passing along the flue, and this could be approximately ascertained by determining the percentage of carbon dioxide in the flue gases, the weight of coal burned in a given time, and the percentage of carbon in the coal; the loss of heat carried up the chimney could thus also be ascertained. It would no doubt be a good indication to the fireman if the temperature behind each flue could be recorded in front of the boiler by the dial of an electrical thermometer, so that he might be able to know when an excessive quantity of air was entering the furnace. Mr Sinclair Couper said "If any benefit arose from the use of Makin's cones, it would likely come from the breaking up of the volume of gases passing through the flue, thereby utilizing the heat to better advantage from a given quantity of fuel . . . the gain being shown in the reduced consumption of coal, with no increase of evaporation per unit of heating surface." That was precisely so; the boilers tested were those in actual use, and whilst it was possible to largely increase the evaporation per unit of heating surface, it was impossible to do so without generating a great deal more steam than was necessary, and the economy could thus only be measured by the lesser quantity of coal required to do the same work. Mr C. A. Matthey also referred to this point, and spoke of the small result in the boilers tested as regarded heat produced per unit of grate area and of heating surface. As to that a greater proportionate result was obtained when the boiler was worked to produce the full amount of steam for which it had been constructed. A boiler steaming more slowly would not evaporate as much water per lb. of coal, and he, therefore, did not see why Mr Matthey should not regard the saving of 30 per cent. on the working conditions of the boiler as satisfactory. Mr H. W. Andrews referred to the consumption of 8·1 lbs. of coal per square foot of grate area as "not a commercial

consumption at all, being little more than banked fires." He did not know what he meant by "a commercial consumption." The boilers tested were used for commercial purposes and generated the steam necessary for such purposes. There were thousands of similar boilers throughout the country and he thought, therefore, that this consumption must be regarded as "a commercial consumption" Mr Matthey said, in speaking of the cones, "he would not be surprised to find a considerable increase, not only in comparison with a plain flue, but also in comparison with one fitted with Galloway tubes; but to claim impossible results was calculated to discredit what might really be a useful invention." In answer to this he ought to point out that he did not claim anything for the cones, but simply gave the results of the tests of two boilers which spoke for themselves. The tests were made with Lancashire boilers free from scale, and the suggested explanations given by Mr Matthey did not help to explain matters, as in each case the tests were only made after the boiler had been working for several days continuously, and the cones under those adverse conditions showed the large economy mentioned. It was obvious that the percentage of gain could not go on *pro rata*, as the conditions of use of a boiler approached the theoretically possible results, and he certainly had not suggested such a thing. The amount of heat generated per square foot of heating surface was no criticism of economy, and only came in when the contest was for boiler efficiency, *i.e.*, for the production of the greatest amount of steam in a given time, and it was in this specially that the cones showed to greatest advantage. Mr Matthey did not believe it possible that steam could exist inside a boiler in a superheated condition, and he was of the same opinion some time ago, now he had no doubt that it could and did exist in the boiler fitted with cones in a superheated condition. Boilers in which cones had been fitted yielded steam from the manhole (in open evaporation tests) which was transparent from one to two or three inches from the edge of the manhole, whilst steam generated from the ordinary Lancashire boiler came away in a dense white condition from the edge. This

Mr Thomson.

observation had been repeatedly made by many who had witnessed the experiments; besides this, the steam generated from the cones drove engines more easily than that from the ordinary boiler. Mr Sinclair Couper asked "what was the advantage of the cone as a water circulator?" He might say that in a model boiler about five feet long fitted with cones, at the front end of which was fixed a thick glass window, the exits from the cones could be seen spouting like a series of hose pipes, even when the pressure rose from 150 to 200 lbs. on the square inch; further, on hard firing the boilers fitted with cones, and filled with cold water, the top and bottom of the boilers became heated *pari passu* nearly to the same temperature. Mr Couper did not see how the passages for the water through the cones could be kept clean and free from incrustation if the feed-water contained any salts or deposits which would be liable to adhere "no matter how rapid the circulation might be." This proposition answered itself, but it was found in practice that there was nothing in ordinary hard waters which would adhere to the cones, and the rapid circulation of the water kept them clean. There had been cases in which the tubes became blocked; one was due to woollen fibres getting into the boiler and blocking up the cones, and another was where the boiler got filled with mud and sediment up to the bottom of the flue tube; but cones had now been working for upwards of two years with exceedingly hard waters, without any appreciable incrustation or sediment becoming attached to the interior of the cones or tubes. Mr Reid thought that the application of the screw joint connecting the cones to the boiler tube could not be made on a boiler with corrugated flues. It would certainly be more difficult than with plain flues, but he had been told that it would not prove a serious difficulty. He also thought that the screw joint might give trouble; up to the present, however, out of several thousands of joints made, not one had given trouble, and many of them had been in constant use for upwards of two years. Mr Reid considered that the fitting of cones in marine boilers was impracticable; that, however, was

not the opinion of all marine engineers, and it seemed to him that if cones were fitted in marine boilers a great advantage would be gained in getting steam up rapidly, which was a supreme necessity in war ships, and giving greater efficiency to the boiler and greater economy in coal. The chairman asked if cones had been fitted to any marine boiler. This had never as yet been done; attempts had been made to fit them to two or three marine boilers, but in each case their peculiar construction had prevented this being carried out. Prof. Watkinson assumed that as a whole vertical row of tubes would require to be removed from each furnace in marine boilers to get the vertical pipes from the cones into position, that this would have the effect of reducing rather than increasing the efficiency of the boiler. He thought this would not be so, because the very high temperature to which the cones would be subjected would give to them, and to the water in contact with them, a much greater amount of heat than would be given to the boiler by the much colder flue gases which passed along the horizontal tubes; besides, the steam generated in the cones would be delivered directly into the steam space, and the engines could therefore be worked much sooner, starting with the boiler cold, than with the ordinary boiler, and added to that the boiler could be vigorously fired after being filled with cold water without risk of straining the plates, and a vigorous circulation and equal temperature throughout the boiler could afterwards be maintained, thus giving a greater store of energy in the boiler than could be obtained without the cones. Mr Reid referred to their influence in preventing smoke. The cones under ordinary conditions diminished or prevented the formation of smoke; if, however, there was not sufficient air allowed to enter the furnace, especially when fresh coal was introduced, smoke was bound to be produced, and no kind of apparatus could prevent it. Mr Andrews and Mr Wilson alluded to the short time during which the tests were made. In answer to this, he might say that long tests of several days duration, and also short tests had been made, and similar results had been obtained in both. The experience gained by those who had made

Mr Thomson.
the tests enabled them to allow the fire to burn nearly out before commencing the test and to do the same in finishing it, so that there could never be anything like the conditions suggested by Mr H. W. Andrews. He would also here point out that Mr Andrews' calculations were at fault. Twenty cubic inches of solid coal weighed about 1 lb., coal in small pieces would, of course, weigh much less, and he had much exaggerated the fact even assuming his calculation to be correct that, the amount of coal on the fire at start and finish could not be estimated within a thickness of one inch. Such coal under any conditions would not be equivalent to fresh coal, as it would be at least partially consumed. He quite agreed with Mr Andrews that if water was very hard, it should not be used in boilers, as such waters could usually be so readily softened. The temperature of the air, as suggested by Mr Andrews, could not make any very appreciable difference in the result, because a difference of 40 degrees, even if using 20 lbs. of air per lb. of coal, would only give a loss of heat equal to a fraction over 1 per cent., and this would probably be more than counterbalanced by getting a greater volume of oxygen to act on the fuel in a given time, thus generating a higher and, therefore, more economical initial temperature. Prof. Watkinson referred to the increased draught produced by the cones and asked how it was determined. It was usually determined by the wheel anemometer, placed in the centre of the air opening under the furnace door, the average draught being taken when working the boiler, first, under ordinary conditions, and then after fitting the cones, the dampers being equally open in both cases; under these conditions the draught, which was sufficient for generating the required amount of steam, was originally obtained, after fixing the cones, by lowering the dampers, and they had to be lowered usually to give even less draught than was used before, as the air was more completely consumed and a higher initial temperature produced. In reference to the closing of the by-pass flue to the boiler mentioned, to which Prof. Watkinson alluded, the explanation was, that after the cones were fixed the dampers were used in the

Mr Thomson.

way that they had been used for many years before, the steam was then found to be generated so rapidly that it blew off vigorously at the safety-valve, and it was found that the closing of the by-pass reduced the draught to that necessary to give the required amount of steam with the cones, and the rust had to be removed from the damper by hammering before this could be accomplished. Mr Wilson referred to the difficulty of keeping the flues clean when the cones were fixed in a Lancashire boiler; this, however, had not proved to be a difficulty, a little dust had been found behind the pipes of the cones, and as the bottom of the boiler flue tube under ordinary conditions was very inefficient as a heating surface, no loss in economy was thus experienced. Mr Hall-Brown stated that it was impossible that anything put into the flue of a boiler would not obstruct the draught. He had, therefore, the same opinion as the officials of the German patent office had before they tested the appliances. These gentlemen, however, tried the experiment and found they were mistaken and decided that a new principle as applied to boilers (as Mr Sime pointed out) had been established. He presumed Mr Hall-Brown refused to believe even the German patent office officials. There could be no doubt about the draught being increased by the use of the cones. He would not say by reason of an injector-action being produced, as he was not quite satisfied that that was the whole or even part of the explanation. Air could not be heated by radiated heat, it could only be heated by convection, and it was possible that as the air came into contact with the hot rings of the cones it reached a higher temperature than it would otherwise do, and as the draught of a chimney depended on its height and on the temperature of the flue gases in it, the increased temperature of the air in the chimney might have something to do with the increase in the draught. If a bundle of cotton waste saturated with oil were tied to the end of a long iron bar and ignited, and then pushed near to the first cone after the fire had been withdrawn from the furnace, the flame was sucked through the openings in the cones, and produced a roaring noise, the

Mr Thomson.
white flame of the oil instantly became blue as it passed along and got mixed with the air which was drawn in by the louvre openings between each cone. Mr Rowan thought that the cones could only act by concentrating the already existing currents; this, however, was not so, the cones produced a much greater suction of air through the air openings in the boilers. Mr Rowan was sceptical about the flame sweeping round both back and front, and centres and sides of the cones, but from observation this really appeared to be the case. Mr R. T. Napier suggested that the only use of the cones could be as an increased heating surface, but he did not take into account that this heating surface was placed in one of the hottest parts of the flue, and that the constant rush of water over this heated surface would give a greater amount of heat to the boiler than would be the case of simply increasing the ordinary heating surface of the boiler. Prof. Jamieson mentioned that boiler insurance companies objected to Galloway tubes or any other obstacle in boilers. He was afraid that many of the boiler insurance companies would object to any improvement in boilers if it gave their men a little more trouble in examining them, and it appeared to be the case that steam users were too easily influenced by what the boiler insurance company officials told them. Mr Rowan said "he could not understand what the object was in introducing the statement made as to the conductivity of boiler plates, or, as he (Mr Thomson) preferred to term it, the power of heat to penetrate the plate. It had no connection, that he could see, with anything urged in favour of Makin's cones." He drew a very marked distinction between the "conductivity" of the plate and "the power of the heat to penetrate it." Assuming the water to be at 300 degrees Fah., probably Mr Rowan would suggest that he would get as much heat into the boiler by passing the same number of units of heat contained in a larger volume of flue gases at, say, 400 degrees Fah., as he would get if he passed a smaller volume at, say, 1600 degrees. He thought engineers would not accept that proposition as true. Mr Rowan misunderstood his reference to radiated heat. He did not

suggest that more heat would be imparted to the boiler by radiated heat than by the flame, but that as a large amount of radiated heat must be produced from the glowing coal, that heat must have a considerable influence on the efficiency of the boiler. Some of the radiated heat might be reflected from the surface of the flue tube, but, if so, it would be reflected on to another part of the surface, and ultimately absorbed by the plate; but as the plates were usually rough and tarnished, it was probable that most of the radiated heat would be absorbed at once by the surface of the plate. Mr Rowan thought the use of radiated heat was to increase the temperature of combustion. He should say it was the combustion which produced the radiated heat, and the radiated heat would certainly not heat the gases emitted from the coal at all.

The CHAIRMAN said he was sure they were all very much indebted to Mr Thomson for his paper, which, together with the discussion that had taken place, would form a very valuable contribution to their Transactions. He asked the members to accord Mr Thomson a very hearty vote of thanks, and expressed the hope that perhaps at some future time Mr Thomson might favour them with some particulars of a more extended boiler trial, as Mr Sinclair Couper had suggested.

The vote of thanks was carried by acclamation.

THE DYNAMIC BALANCE OF THE CONNECTING-ROD.

By Mr C. A. MATTHEY (Member).

SEE PLATE VII.

Held as read 20th January, 1903.

THE object of the following paper is to investigate the effect of the inertia of the connecting-rod in communicating vibration to an engine, and to discuss the possibility of so balancing the engine as to remove such vibration entirely.

It has frequently been laid down as a maxim, when dealing with an engine with a single crank and connecting-rod, that—"Reciprocating weights must be balanced by reciprocating weights, and revolving weights by revolving weights;" but the particles constituting the connecting-rod have neither a purely revolving nor a purely reciprocating motion; they describe oval paths, not differing greatly from ellipses, of different degrees of elongation, being nearly circular near the "big" or crank end of the rod, and narrow near the "small" or crosshead end. The particles do not even lie in the centre line of the rod, but different particles in the same cross section describe paths of different shapes.

It has been usual to consider any rod as equivalent, so far as its inertia forces are concerned, to an imaginary rod, capable of transmitting thrust and tension, but entirely massless along the whole length, and having two heavy particles only in the centres of the crank-pin and crosshead-pin respectively: the sum of the weights of these particles being equal to the weight of the real rod, and their centre of gravity in the same point of the length as that of the real rod. The imaginary particle in the crank-pin is then included with the strictly revolving weights, and that in the crosshead with the strictly reciprocating weights.

Now, suppose a single-crank engine to be balanced on the above

supposition, having weights on extensions of the crank arms to balance the revolving weights and one heavy particle; and a weight equal to the reciprocating weights *plus* the other heavy particle, having its centre of gravity in the centre line of the engine, and actuated by levers or other mechanism, so that it is always moving at the same rate as the crosshead, but in the opposite direction. It is clear that such an engine, of which one form is outlined in Fig. 1, is statically balanced, that is, it will stay in any position in which it is put: it is also obvious that if fitted with a massless rod with two heavy particles in the ends, it would be dynamically balanced when the crank turns at uniform speed, if maintained at that speed by forces internal to the engine and its frame. But in an actual engine, with a rod whose mass is distributed along its length, these questions present themselves:—

Is the dynamic balance the same as if the rod were massless, with two heavy points in its extremities, as indicated above?

If not, what is the defect from perfect balance of the material rod, *numerically expressed*, at each point of the revolution?

And last, is any modification of the ordinary rod possible, which will remedy the defect?

Answers to these questions will go far towards exhausting the subject.

It will facilitate the enquiry if three kinds of rod are considered, two imaginary and one practicable, thus:—

Rod W.—The ordinary connecting-rod, having a certain length between the centres, which may be called the articular length, and an extreme length only so much longer than the articular length as is necessary to complete the eyes surrounding the crank-pin and crosshead-pin. It will be represented by Fig. 2.

Fig. 2.

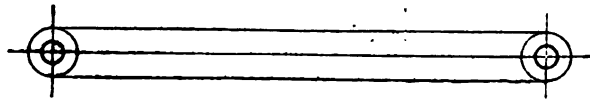

W rod.

Rod X.—A rod of the same articular length as rod W, and the same weight, and having its centre of gravity at the same point of the length; but supposed to be entirely massless, except for two heavy points situated in the centres of the eyes at the extremities. It will be represented by Fig. 3.

Fig. 3.

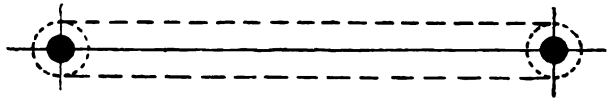

X rod.

Rod Y.—A rod of the same articular length, the same weight, and having the same position of centre of gravity as rod W, and massless, except that all the weight is supposed to be concentrated in one point, viz., at the centre of gravity. It will be represented by Fig. 4.

Fig. 4.

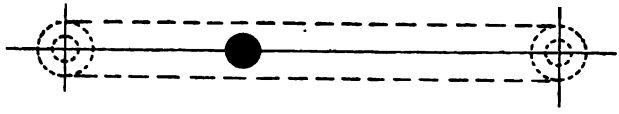

Y rod.

The argument will lead later on to the consideration of a fourth rod, practicable and not imaginary; but for the present the above three suffice.

Attention may be confined solely to the connecting-rod and the weights intended to balance it, with their actuating mechanism, leaving out of consideration the other moving parts (the crank and piston, etc.), because there is no doubt whatever about them.

Thus let Fig. 5 represent an X rod consisting of two heavy points A and B united by a constant massless length A B, A being guided in the circle, whose centre is C, and B in the straight line C B E. D is a revolving weight, equal and opposite to A, and E is a weight equal to B, and always moving in the straight line C B E,

at the same speed as B, but in the opposite direction. That is, B and E are always equidistant from a fixed point F in CB. One way of producing this motion of E is indicated by the two equal straight levers rocking about their centres at the point F, and the four equal links. The reason that two levers and four links are required is, that if only one lever and two links were used (which would be quite sufficient to give the necessary motion to E), they would not be dynamically balanced — the lever has a varying angular velocity, involving accelerating and retarding couples which recoil upon the frame of the engine, and the links also are out of dynamic balance. But by the use of two levers and four links, supposed to be all in one plane, every couple is balanced by an equal and contrary couple. It is almost needless to add that the members may be made virtually to lie in one plane by splitting one lever longitudinally, and placing one half on each side of the other lever, and similarly treating the links. Then this actuating mechanism of the reciprocating balance weight E, being dynamically balanced, may be neglected, and the four heavy points, A, D, B, E, have only to be considered. It is axiomatic that these are dynamically balanced at uniform speed of rotation of A and D about C, if only internal forces act.

The position of the point F, which always bisects BE, is immaterial. With centre D and radius AB describe a circle, as shown in Fig. 6, cutting BC, produced beyond C, in E. This gives a new position of E; and as the two triangles BAC, CDE, are equal in all respects (Euclid 1, 26), EC is equal to CB, and we have in effect transferred the point F to C. And if, as the points A and D revolve, E moves, actuated either by the "lazy-tongs" mechanism of Fig. 5 or by any other, so that EC is always equal to BC, then is ED also always equal to AB. Therefore, the motion of E is the same as if it were connected to D by a massless rod, and such a rod may be introduced, and will, with a guide for keeping the point E in the line CBE, constitute the actuating mechanism which makes E balance B. This leads up to a form of engine which has been made occasionally for driving

fans and dynamos, having virtually two equal pistons, connecting-rods, and cranks, their centres lying in the same plane on opposite sides of the shaft, and the cranks being opposite to each other—only that it has the imaginary rods of the X type, instead of ordinary rods of the W type. As the crank-pins and rods could not complete a revolution in one plane, in practice one of the systems is replaced by two, each of half the weight, moving in parallel planes equidistant from the plane of the other system, but for the purpose of this argument the rods AB and DE may be supposed to lie in one plane.

At the risk of being tedious and tautological, I repeat that it is indisputable that the arrangement in Fig. 6 is dynamically balanced at uniform angular speed, *if both rods are* X *rods*, and if all the forces acting are internal to the frame. There are then only the four heavy points in the system. The balance may or may not be perfect if one or both of the X rods be replaced by a W or a Y rod, that is the question we have to settle; but with two X rods the balance is obviously perfect. It was not necessary, in order to arrive at the form Fig. 6, to follow the circuitous argument above: I might have commenced with this form, but that would have looked like choosing a particular case; looked, in fact, like merely investigating what is known as the "three-crank fan engine;" whereas, I have endeavoured to emphasize the fact, that a single X rod AB is the exact equivalent of a rotating and a reciprocating weight, no matter where the latter is placed. That is, that the X rod AB in Fig. 6 is dynamically the equivalent of the weights D and E in Fig. 5, no matter how remote E may be in the latter figure; or of the revolving and reciprocating balance weights in Fig. 1. Now, Fig. 6 lends itself admirably to the comparison of different forms of rod, and it follows that what is true of this form is also true of the others.

In Fig. 6 let G be the centre of gravity of the heavy points A and B, draw BH at right angles to BC, and produce CA to meet BH in H. Then H is the instantaneous axis of the rod for that position of the crank. Join HG.

In Fig. 7, the angle ACB which the crank makes with the centre line is the same as in Fig. 6, but the X rod AB has been replaced by a Y rod of the same weight, while the X rod DE remains. The length AG in Fig. 7 is the same as in Fig. 6. It has to be considered whether Fig. 7 is dynamically balanced, that is, by how much, if at all, it differs from Fig. 6. The geometry of the two figures is identical, they only differ in the weight which is divided between A and B in Fig. 6, being concentrated in the one point G in Fig. 7.

Now, when a body has, as these rods have, motion in two dimensions only, that motion at any moment is completely determined if the rate and direction of the motion of its centre of gravity, and the simultaneous rate and direction of its angular motion about the centre of gravity are known. Further, if the following are known—

The weight of the body:
Its moment of inertia about its centre of gravity:
The instantaneous rate of linear acceleration of the centre of gravity.
The instantaneous rate of angular acceleration about the centre of gravity:

then all the inertia forces acting on the body are known. Acceleration may of course be negative when it stands for retardation.

Both the X rod of Fig. 6 and the Y rod of Fig. 7 have the same instantaneous axis H, and are revolving about it for the moment at a speed, expressed in terms of the speed of the crank shaft, $\frac{CA}{AH}$. In both rods the direction and velocity of the centre of gravity is the same; the direction is at right angles to HG, and the velocity, expressed in terms of the constant velocity of the crank-pin, is $\frac{HG}{HA}$.

Also, the linear accleration of G is the same for both rods. Its

numerical value need not be sought, as it is only the *difference* in the inertia forces that has to be found.

Also, the angular velocity about the centre of gravity is the same for both rods, being the same as the angular velocity about H, viz., $\frac{CA}{AH}$; and again, the acceleration of angular velocity about the centre of gravity is the same for both rods. It is necessary to know what this instantaneous change of angular velocity is—it will be investigated later on.

But, herein lies the difference between the two rods, their moment of inertia about G is not the same. That of the Y rod is zero, that of X rod is—

$$A \times AG^2 + B \times BG^2.$$

So that the X rod has a couple acting on it which imparts a certain angular acceleration (to be found presently) to the above moment of inertia. And this couple is necessary to the complete motion of the X rod AB; that is, is necessary to make it dynamically balance its counterpart DE. *This couple, then, is the measure of the defect of the* Y *rod in Fig. 7 from complete balance.*

Now replace the Y rod by an ordinary or W rod, keeping the X rod DE as a counterbalance. Then the defect from true balance is, *a couple which will impart to a body whose moment of inertia is the difference between the moments of inertia of the X rod and the W rod, the instantaneous angular acceleration which the rods are undergoing in any position of the system.*

Before leaving this part of the subject, and proceeding to find what is the angular acceleration of the rod at any moment, I wish to draw attention to a point which, I think, will be of interest. Suppose in Fig. 6 both X rods are replaced by Y rods, or by W rods, will the balance then be perfect? It looks at first sight as if it would be; the rods are exact duplicates of each other, and one is tempted to jump to the conclusion that the inertia forces of each are equal and contrary to those of the other. But this attractive symmetry is deceptive; a little inspection will show that the angular motion

and the angular acceleration of both rods is *in the same direction.* It is, therefore, clear to my mind that the want of balance in Fig. 7, instead of being corrected by replacing the X rod DE by a Y rod, and so making both rods alike, is doubled: and that the three-crank fan engine, instead of being perfectly balanced, as it appears to be, is twice as much out of balance as its central engine alone would be, if balanced by revolving and reciprocating weights, after the manner of Fig. 1, and precisely as much out of balance as if all the corresponding parts of the three engines were thrown together to make a single engine of double the weight of the central engine, and balanced like Fig. 1.

Consider now what is the angular acceleration of the rods at any position of the cranks. It has been seen in Fig. 6 that the angular velocity of the rod AB about G is $\frac{AC}{AH}$, expressed in terms of the velocity of the shaft; that is, $\frac{CJ}{JB}$, AJ being drawn perpendicular to CB; that is, approximately, $\frac{CJ}{AB}$. It is as well to ask what degree of error is involved in neglecting the difference between JB and AB. The error is greatest when the angle ACB is a right angle, and, with a connecting-rod four cranks in length, JB is then $\sqrt{\frac{15}{16}}$ of AB, say 97 per cent. So without great error we may take the angular velocity of the connecting-rod as varying as the cosine of the angle between the crank and the centre line: when the crank is on the centre the angular velocity is $\frac{1th}{n}$ that of the shaft, n being the ratio of length of connecting-rod to length of crank, and it dies away, varying very approximately as cos ACB, to zero when AC is at right angles to CB; not, be it observed, at half-stroke of B, nor when BA is at right angles to AC, nor when the linear velocity of B is a maximum; but at "quarter-crank," when the instantaneous axis H has receded to an infinite distance.

The angular velocities then varying as cos ACB, the rate of acceleration of angular velocity varies as sine ACB, (the differential of the cosine is the sine). Therefore the diagram representing angular accelerations, or the couples causing them, would be very approximately a pair of rectilinear triangles KLC, MNC in Fig. 8, KCM being at right angles to CB, any abscissa, as OP, representing the angular acceleration of the rod for the position A of the crank-pin. This diagram is analogous to the familiar "diagram of the inertia of the reciprocating parts," when the connecting-rod is infinite: there the speed of the piston, etc., is as the sine of ACB, and the accelerating force as the cosine. The accurate form of the diagram of angular acceleration, the error due to the assumption that JB is equal to AB being corrected, will be something like the dotted line QCR in Fig. 8. I should have been better pleased if I could have given the accurate values of at least the end ordinates, but must confess that on making the attempt I became involved in such unmanageable trigonometrical expressions, that I had to give it up.

It is clear that the end ordinate, or maximum acceleration, is a little more than double the mean; so we come to this conclusion:—

In an engine balanced as in Fig. 1, the unbalanced couple varies very nearly as the sine of the angle between the crank and centre line, and its maximum value is a little more than twice the uniform accelerating couple which would accelerate a body whose moment of inertia about its centre of gravity is the difference between that of the connecting-rod and that of the corresponding X rod, from rest to $\frac{1}{n}^{th}$ *the angular velocity of the crank shaft, in the time required for the shaft to describe one quarter of a revolution.*

Coming now to the question: Is there any means by which this unbalanced couple can be done away with? Clearly it can be done by making the moment of inertia of the actual rod the same as that of the corresponding X rod, by extending it at one or both ends. It might be called a Z rod, and represented by Fig. 9 or Fig. 10.

In either form, the articular length is the same as the length of a simple pendulum having the same period of oscillation as the rod when hung by either extremity of the articular length. The time in seconds of a single swing of a simple pendulum l feet long is $\cdot 554\sqrt{l}$, assuming gravity constant at 32·2. Supposing the rod to be of uniform section, the extreme length of Fig. 9, if the prolongations at each end are equal, will be about 1·73, that is $\sqrt{3}$, times the articular length: while if the prolongation were at one end only, no matter whether at the big or the small end, the extreme length will be about 1·5 times the articular length. I say *about*, because the rod is not a mere line, but has breadth in the plane of motion of the rod, and this breadth goes to increase the radius of gyration. Indeed, we might obtain the necessary moment of inertia without prolonging the length, by increasing the breadth only. In that case the "rod" would become an oval or oblong plate in side view, its shorter diameter being the articular length. It would be next to impossible to make a rod by calculation whose period of oscillation would be exactly as predicted: it would have to be corrected by trial. For this purpose the simplest procedure would be to insert a sector in the eye of the big end, and suspend the rod upon a suitable support at the apex of the sector, (the centre of the eye), as shewn in Fig. 11. It must then be swung, and its period ascertained, and corrected by taking from or adding to the ends until the correct period is attained. And then, and not until then, should the centre of gravity be found by trial, and the weight of the rod apportioned between the revolving and reciprocating balance weights.

When an overhung crank is used, for which a rod in one piece, as shown in Fig. 11, is suitable, the revolving balance weight placed 180° from the crank-pin does not lie in the same plane of motion as the connecting-rod, and a "centrifugal couple," as Rankine called it, is produced. To avoid this, the weight opposite the crank-pin must be heavier than is necessary to exactly balance

the weight supposed to be concentrated in the centre of the crank-pin, and then the balance must be restored by a smaller weight placed on a crank farther along the shaft, and occupying the same (projected) position as the crank of the engine; its distance being such that the centre of gravity of this small weight and the weight of the crank-pin lies in the same transverse plane as that of the heavier intermediate weight opposite, as shown in Fig. 12, which represents a pair of driving wheels and their axle, in a locomotive engine of the outside cylinder type. The weights at A and C are statically balanced by the weight at D, and the centre of gravity of A and C lie in the same plane at right angles to the axis as the centre of gravity of D.

Then is the adoption of these Z rods to be recommended? If, as may appear to be the case to many who have read the above arguments, they produced a perfect dynamic balance in an engine running at uniform speed, I should say, yes, certainly. But, unfortunately, they will do nothing of the kind. I say this with a good deal of disappointment, because I set out to show that they would prevent all vibration, and have only seen the light in the course of writing this paper.

The fact is, it is not sufficient in an imaginary engine, such as is shown in Fig. 6, with two X rods, that the heavy points, A and D, should revolve uniformly, and B and E should be always equidistant from C, *it depends on the source of the forces which produce the varying velocities of B and E* whether the dynamic balance is perfect or not. If those forces are *internal to the frame*, that is, if they react on the frame, as the steam pressure on the piston reacts on the cylinder cover and thence on the framing, the balance will be perfect, but if not, if they receive energy from and impart it to the crank-shaft, the balance will not be perfect.

Consider the engine to be running idle without friction at high speed, no power being given off. It is known that certain forces are exerted along the centre line EB, alternately accelerating and retarding E and B: they are the ordinates of the well known "diagram of the inertia forces of the reciprocating parts

for a finite connecting-rod," which can be drawn by Klein's construction, and may be called the Klein diagram for brevity. Suppose the steam pressure on the pistons to give at each moment the accelerating or retarding force on B and E, shown on the Klein diagram, the net power exerted by the engine will still be zero. We previously neglected everything but the connecting-rod, but we may now include with each of the points B and E a crosshead, piston-rod, and piston. Then clearly there will be no force along the connecting-rods, and if these massless rods were removed the points B and E would still move, so as to keep the lengths AB and DE constant. The reactions of the forces urging B and E respectively come on the frame in the same line and in opposite directions, and annul one another; there is no net translating force on the frame, and no couple.

But now let there be no pressure on the pistons, but let the engine be run with large cylinder drain cocks open, or better still, with the cylinder covers removed. Let the two massless X connecting-rods be put back in place, or, in practice, three Z rods be placed in the fan engine, one heavy and two light. Then the forces of the Klein diagram must be transmitted to D and E from A and B, the rods being alternately in thrust and tension. Thus, in Fig. 13, let the shaft be turning in the direction of the arrow, and let B be a position of the crosshead not far from the right hand end of the stroke, so that it has not yet attained its maximum velocity, but is still being accelerated towards the left. Draw BS on the centre line equal to the vertical ordinate of the Klein diagram for that position, and BT perpendicular to BS, and complete the parallelogram of forces S U T B. Then B U is the tension of the connecting-rod, and BT an upward pressure on the guide bar. Similarly, there is an equal downward pressure, EV, on the guide-bar of E, and these two opposite forces and the arm EB constitute the disturbing couple. It is easy to plot a curve by geometrical construction whose ordinates represent this couple; it is zero at each end of the stroke, and for that position where the velocity of B and E is a maximum, and it itself is a maximum at

some intermediate point; but the process of writing down the general expression for the couple, differentiating and equating to zero in order to find both the maximum value and the position of B at which it occurs, is beyond the limited mathematical powers which alone I possess.

In addition to the above static proof of the existence of an unbalanced couple in an engine made like Fig. 6, and fitted with X or Z rods, running frictionless and unloaded with the cylinder covers off, the same conclusion may be arrived at by applying the broad principle of the conservation of angular momentum. The heavy points B and E have a varying energy of motion, sometimes they are at rest, and sometimes they are moving faster than A and D. Therefore they take energy from, and yield it to, the fly-wheel. If there is no separate fly-wheel, then A and D constitute one. While B and E are being accelerated, the fly-wheel is losing energy and being retarded, that is, its angular momentum is diminishing. But the angular momentum of the system is constant, therefore the engine frame, together with the structure to which it is attached, has an increasing angular momentum in the same direction as the shaft. And conversely, when B and D are going slower, and giving back their energy to the fly-wheel, and so increasing its angular momentum, the frame is recoiling in the opposite direction. Thus there is an alternating couple on the frame.

It would therefore appear to be of little use to modify the ordinary connecting-rod, and hopeless to expect ever to perfectly balance an ordinary engine, even of the three-crank fan engine type. One kind of engine occurs to me in which the balance would be perfect, if fitted with Z connecting-rods and balanced like Fig. 1, and that is the Root's blower engine with two shafts geared to revolve in opposite directions, the pressures on the guide bars of the two connecting-rods counteract each other, but that is quite an exceptional case.

Although this paper ends in no practical recommendation, I, nevertheless, venture to submit it to the Institution: it has afforded me considerable instruction while writing it, and I hope

it may prove to be not without interest to a few, at least, of the Members.

Discussion.

Mr E. HALL-BROWN (Member of Council) said he should like to point out that on page 177, Mr Matthey having balanced an engine somewhat in the style of Macalpine's engine, said: "It is also obvious that if fitted with a massless rod with two heavy particles in the ends, it would be dynamically balanced when the crank turns at uniform speed, if maintained at that speed by forces internal to the engine and its frame." Afterwards, he thought, Mr Matthey had recognised the fact that that engine would not be absolutely balanced, for the simple reason that, although he had disposed of the connecting-rod and replaced it by a massless rod with a "heavy particle" at each end, he did not thereby get rid of the acceleration of the piston and rod, and consequently the horizontal component of the pressure on the connecting-rod necessary to produce that acceleration gave an unbalanced pressure upon the frame of the engine. Mr Matthey recognised that fact, and stated it towards the end of the paper; probably had he recognised it earlier, they would have been without a most original and instructive paper. Further, it occurred to him what a very useless thing it was even to conceive of an engine maintained at a speed by forces internal to its own frame. After all, an engine was made for the purpose of giving power outside of itself, and as long as that was the case, they had accelerations of the engine frame caused by the variations in the turning moment, which, in ordinary engines, were probably much in excess of the vibrations set up by the force necessary to accelerate the connecting-rod. Therefore, it seemed almost a useless refinement—even if it were possible to balance the connecting-rod—to discuss the matter. There was another point that occurred to him. Mr Matthey afterwards used what he called "the three-crank fan engine" as an example of balancing, and pointed out that what applied to that engine pretty well applied to an engine balanced as in Fig. 1, only that the couple tending to turn the engine frame about the crank-shaft,

Mr E. Hall-Brown.

caused by the force necessary to accelerate the connecting-rod, was, in the "three-crank fan engine," twice as great as in an engine balanced as in Fig. 1. Whether this was correct or not would depend upon a comparison between the moments of inertia of the three connecting-rods, and the moment of inertia of the single rod; and, in favour of the three-crank engine, it must be remembered that in an engine balanced as in Fig. 1, with masses moving in opposite directions to the piston, one result was to double the reciprocating masses, and consequently to double the horizontal component of the force on the connecting-rod necessary to accelerate these masses. Consequently, in this respect, the engine balanced as in Fig. 1, compared unfavourably with the three-crank fan engine. Of course, it was possible to balance as in Fig. 1, by splitting the cylinder into three, so that the two side cylinders were equal to the centre one, as in the three-crank fan engine. If this were done, the several masses, etc., would again be altered, and it would be necessary to work out actual examples for comparison. The conclusion Mr Matthey came to was that an engine driving two crank shafts in opposite directions, like a Root's engine, was the only engine that could be balanced by what he called a Z rod. As a matter of fact, a Root's engine was balanced with an ordinary connecting-rod, because whatever couple was necessary to give the acceleration required by one connecting-rod, an equally opposite couple was required for the other connecting-rod at every point, and therefore a Root's engine was a balanced engine if the reciprocating masses were balanced, as in Fig. 1, without any alteration from the ordinary style of connecting-rod. While desiring to thank Mr Matthey for his interesting paper, he regretted that the conclusions arrived at were a little bit discouraging, as they proved that except in that single instance it was impossible to exactly balance a connecting-rod, and he thought the chief merit in the paper lay in its calling the attention of those of the members who had not yet studied the problem of the connecting-rod to that subject, and in brushing up what was left of the knowledge of those who had studied it some time ago.

Mr ALEXANDER CLEGHORN (Member) said the impression left upon him by the paper seemed to be exactly that left on Mr Hall-Brown. It was disappointing, because he expected to have found that some progress had been made, whereas Mr Matthey had just arrived at the same results which he supposed many of them had arrived at years before. He did not think it was necessary to open a discussion of the whole question of the balancing of engines, in connection with the paper. He would only mention, with reference to Mr Matthey's remark at the end of the first paragraph on page 188, that the complete analytical expressions for the stresses on the guides, due to the motion of the connecting-rod, had been investigated by Mr John Macalpine, and published by him in pamphlet form in 1889. In this connection, he also desired to draw attention to the late Professor Fleeming Jenkins' paper, communicated to the Royal Society of Edinburgh in 1877-8, on "The application of graphic methods to the determination of the efficiency of machinery," and specially to the appendix to Part II., written by Professor J. A. Ewing, wherein the dynamics of the connecting-rod was discussed.

Prof. ARCHIBALD BARR, D.Sc. (Member of Council), said he did not intend to attempt to discuss the paper. He agreed with a good deal that the other speakers had said, but he had not had time to study the paper as carefully as he would like to have done, and he would only like to say that from what he had read of it he thought Mr Matthey had given an exceedingly clear exposition of the points that he had brought forward.

The CHAIRMAN (Mr Archibald Denny, Vice-President) intimated that Mr Matthey, being in Russia, was unable to reply to the discussion on his paper personally, but would reply in writing. He would ask the members to join with him in awarding Mr Matthey a hearty vote of thanks for his paper, although he had said in the last paragraph that it ended in no practical recommendation. Perhaps a man required rather more pluck than usual to confess that he had not arrived at any definite conclusion.

The vote of thanks was carried by acclamation.

Mr Matthey.

Mr MATTHEY, in reply, thanked the gentlemen who had taken part in the discussion for their criticisms, and said, so far as those criticisms were adverse, they were well deserved. The paper he felt, was very faulty, and Mr Hall-Brown was quite right in supposing that he (Mr Matthey) had started with a misconception and only arrived at the truth in the course of writing the paper, which was only a study. It had appeared to him to be the universal practice to treat the engine, so far as inertia forces were concerned, as having an X rod, to use the expression employed in the paper; and he also imagined that very many people took it for granted, as he had done for years, that such an engine as Fig. 1, considered to have an X rod, would not vibrate at all when running frictionless and unloaded. The argument was plausible but erroneous—"Here are two equal weights, always moving in opposite directions in the same straight line and at any instant at the same speed: they can produce no net reaction on the engine. Here also are two equal weights revolving at uniform speed in the same circle at opposite extremities of a diameter: they have no net centrifugal force, and no couple." The error lay in assuming the speed of rotation to be uniform; there was an interchange of energy between the revolving and reciprocating weights, and this caused a variation in the speed of rotation. This was, like most things, simple enough when one saw it, but he confessed that he had overlooked it until he wrote the paper in question. He supposed that any practical investigation of the inertia forces of an engine must be based on the assumption, erroneous though it was, of uniform rotation; otherwise the labour would be simply enormous. On that assumption, the couple he had arrived at on page 184 of the paper was not, as there stated, the unbalanced couple acting on the engine, but the error involved in taking the ordinary connecting-rod as one with two heavy points, that was an X rod. It seemed from what Mr Hall-Brown and also what Mr Cleghorn said, that this was well known. That might be, but it was not universally known. Last session a very interesting paper on the flywheels of slow speed engines was read by Mr Downie, in which

the steam diagrams were corrected by the Klein diagram; yet not one of the many members who took part in the discussion called attention to the missing couple. He (Mr Matthey) had not seen the 1889 pamphlet of Mr Macalpine, referred to by Mr Cleghorn; but in all that gentleman's recent utterances about his engine (which seemed to be identical with that invented by Mr A. Brown of Renfrew, patent specification 8473, of 1889), he appeared to claim a perfect balance for it, except the unbalanced transverse or torsional couple resulting from the fact that the two sets of reciprocating weights did not move in the same straight line, but in two parallel straight lines. At the present moment there was as pretty a quarrel as one would wish to see between Admiral Melville of the U. S. Navy, the champion of the Macalpine engine, on the one hand, and the European advocates of the Yarrow-Schlick-Tweedy four-crank engine on the other. The Admiral, the results of whose investigations were now appearing in the pages of "Engineering," entered most minutely into many abstruse causes of disturbance, yet he assumed the connecting-rod to be one of two heavy points only, and made no correction. He (Mr Matthey) was glad that his paper, faulty though it was, had elicited from Mr Cleghorn a reference to the high authorities he had quoted, as they would be useful to many members besides himself.

NOTES RELATING TO THE DE LAVAL STEAM TURBINE, THE WIREDRAWING CALORIMETER,

AND THE

SUPERHEATING OF STEAM BY WIREDRAWING.

By Professor W. H. WATKINSON (Member).

(SEE PLATES VIII. AND IX.)

Read 17th February, 1903.

PROBLEMS relating to the wiredrawing of steam are of considerable importance in connection with ordinary engines, but they are of much greater importance in connection with steam turbines, wiredrawing calorimeters, injectors, steam jet blowers, steam jet pumps, and also in connection with the possibilities of superheating steam by wiredrawing.

When steam flows from a vessel through an orifice or nozzle into a space where the pressure is lower, without doing work on anything but itself, the steam is said to be wiredrawn.

Under these conditions it is often remarked that the steam expands without doing work, and this loose way of stating the matter has often led to incorrect conclusions.

Steam never expands without doing work. If it has nothing else to do work upon it will do work on itself, in giving itself kinetic energy, and the work which it does on itself is just equal to the work which it could have done on a piston under the same difference of pressure and conditions.

For example, if 1 lb. of dry saturated steam at 160 lbs. per square inch, absolute pressure, be expanded adiabatically to atmospheric pressure in an engine of the reciprocating type, and then exhausted at atmospheric pressure, the amount of

work done by the steam will be represented by the area *abcda* of the pressure-volume diagram, Fig. 1, also by the corres-

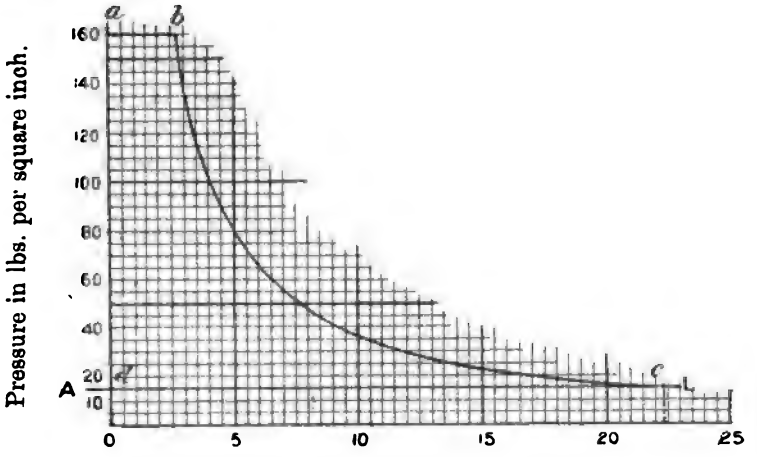

Fig. 1.—Pressure-volume diagram for 1 lb. of steam expanding adiabatically.

ponding area *abcda* in the entropy-temperature diagram Fig. 2. At the end of the expansion the steam, which was initially dry, has the dryness fraction $=\frac{dc}{de}=0{\cdot}87$, Fig. 2, so that in this case 13 per cent. of the steam has been condensed during expansion.

If instead of doing work on a piston the steam be allowed to flow adiabatically through the nozzle of a de Laval turbine, the amount of work done by the steam will still be represented by the areas *abcda*, Figs. 1 and 2, but in this case the whole of the work done by the steam has been absorbed in giving itself kinetic energy. The kinetic energy per lb. of steam leaving the nozzle is, therefore, also represented by the area *abcda*. The dryness fraction of the steam leaving the nozzle is $\frac{dc}{de}$, as before.

The effect of the form of the nozzle on the form of the jet leaving it is well shown in Fig. 3. The forms of jet shown in

Fig. 3 were obtained from sketches and instantaneous photographs taken while steam at 120 lbs. and 60 lbs. gauge pressure respectfully was being discharged into the atmosphere through nozzles of the forms shown. In the jets Nos. 1 and 2, the pressure of the steam at the outlet end of the nozzle was considerably above atmospheric pressure, and, in consequence, the jets increased in diameter on leaving the nozzle. Some of the pressure energy was, therefore, expended in giving other than axial motion to the steam, and the axial velocity of the steam was less than it would have been if the whole of the pressure energy had been expended in giving axial motion to the steam.

In jet No. 3, there is no increase in the diameter of the jet, but the stream lines are not all axial.

In jet No. 4, the stream lines appear to be all axial, and the whole of the pressure energy has in this case been expended in giving kinetic energy to the jet which, therefore, has maximum axial velocity.

The advantage of the diverging nozzle in connection with injectors was discovered by Schau in 1869, and the adoption of this type of nozzle to steam turbines by de Laval enabled him to greatly increase the efficiency of his turbines.

It was found by Mr R. D. Napier, as the result of a large number of experiments on the flow of steam, that the pressure in the orifice through which the steam is flowing is never less than the pressure which, with given initial and final pressures, will give the maximum mass rate of discharge.

This pressure in the orifice is, for steam, approximately 0·58 of the initial absolute pressure, providing the pressure in the space into which the steam is flowing is not greater than 0·58 of the initial absolute pressure.

The variation in the pressure of the steam flowing through the steam nozzle of an injector, as determined by experiment, is well shown in Fig. 4. Figs. 3 and 4 are taken from "Practice and Theory of the Injector" by S. L. Kneass, (Messrs John Wiley and Sons, New York).

The pressure-volume diagram, Fig. 1, shows only the work done by the steam, but the entropy-temperature diagram, Fig. 2, besides showing this, also shows the state of the steam at any point of the expansion, and it can be made to show, as in Fig. 2, the condition of the steam after the kinetic energy has been converted into heat.

One object of these notes is to illustrate the advantages of entropy-temperature diagrams in the treatment of problems relating to steam turbines, and to the superheating of steam by wiredrawing.

The velocity with which the steam issues from a de Laval nozzle can be found thus (neglecting the small amount of work done in pumping the water):—

Gain in kinetic energy = heat converted into work.
= area $a\,b\,c\,d\,a$, Fig. 2.
$= k\,d\,a\,l\,k + l\,a\,b\,m\,l - m\,c\,d\,k\,m.$

That is, $\frac{v_c^2 - v_b^2}{2g} \times \frac{1}{J} = S_a - S_d + q_b L_b - q_c L_c$

In general, v_b is so small that it may be neglected, then

$$\frac{v_c^2}{2g} \times \frac{1}{J} = S_a - S_d + q_b L_b - q_c L_c.$$

The dryness fraction, q_c, of the steam leaving the nozzle may be obtained from Fig. 2, or from the adiabatic equation—

$$q_c = \left(\log_e \frac{\tau_a}{\tau_d} + q_b \frac{L_b}{\tau_b} \right) \frac{\tau_c}{L_c}$$

(For meaning of symbols see Table at end of paper).

Taking $q_c = 0{\cdot}87$, as before, we have

$$v_c = 8 \sqrt{\left\{ 774 \times (363 - 212 + 858 - 0{\cdot}87 \times 966) \right\}}$$
$$= 2890 \text{ feet per second.}$$

If the steam after leaving the de Laval nozzle, referred to above, is caused to flow through the buckets of an ideally perfect turbine wheel, (that is, one which utilizes for work purposes all the kinetic energy of the steam), running at the ideal velocity, the steam will leave the wheel with the temperature corresponding to its pressure, and with the dryness fraction $\frac{dc}{de}$. Fig. 2, as before.

In an ideally perfect wheel, the steam leaving the wheel would, relatively to the wheel, be flowing parallel to the initial jet, and the velocity of the wheel buckets would be half the velocity of the steam jet. In actual turbines the velocity of the buckets is much less than this and the two streams are not parallel. For these reasons the steam has a high residual velocity when leaving the wheel, and the residual kinetic energy is, by friction and eddies, converted into heat. The heat thus generated partially or completely dries the exhaust steam, and in some cases the exhaust steam may be superheated. This is well illustrated by Fig. 5, which is an entropy-temperature diagram showing the results of tests with a small de Laval turbine in my laboratory.

The steam supplied to the turbine was superheated by 110 degrees Fah., as shown at c Fig. 5. Assuming adiabatic flow through the nozzle, the steam had lost its superheat during expansion from c to x, and on leaving the nozzle its dryness fraction was $\frac{ed}{ef}$, and in this condition it entered the buckets of the turbine wheel. The exhaust steam leaving the turbine casing was found to be superheated by 75 degrees Fah., thus showing that the residual kinetic energy in the steam leaving the turbine wheel was not only able to dry the steam, but actually to superheat it by 75 degrees Fah., as shown by the point g Fig. 5.

The turbine casing was well lagged, so the loss of heat from it was small.

The fact that the exhaust steam was superheated enables the thermal efficiency of the turbine to be determined directly,

as follows:—The amount of heat supplied to the turbine per lb. of steam is proportional to the area, $k\,e\,a\,b\,c\,m\,k$.

The amount of heat rejected by the turbine is proportional to the area, $r\,g\,f\,e\,k\,r$.

If the wheel had been ideally perfect it would have converted the heat represented by the area $e\,a\,b\,c\,d\,e$ into work, and the area $m\,d\,e\,k\,m$ would have represented the amount of heat rejected.

If now the area $a\,b\,c\,j\,h\,a$ be made equal to the area $m\,d\,f\,g\,r\,m$, the area $e\,h\,j\,d\,e$ will represent the amount of heat actually converted into work.

$$\text{The thermal efficiency} = \frac{\text{heat converted into work}}{\text{heat supplied.}}$$

$$= \frac{e\,h\,j\,d\,e}{k\,e\,a\,b\,c\,m\,k}$$

Now, $e\,h\,j\,d\,e = k\,e\,a\,b\,c\,m\,k - (m\,d\,e\,k\,m + m\,d\,f\,n\,m + n\,f\,g\,r\,n)$.

Therefore, the thermal efficiency is

$$E_t = 1 - \frac{m\,d\,e\,k\,m + m\,d\,f\,n\,m + n\,f\,g\,r\,n,}{k\,e\,a\,b\,c\,m\,k}$$

$$= 1 - \frac{L_d + K_p\left(t_g - t_f\right)}{t_a - t_e + L_b + K_p\left(t_c - t_b\right)}$$

$$= 1 - \frac{1004 + \cdot 48\left(233 - 158\right)}{355 - 158 + 864 + \cdot 48\left(465 - 355\right)} = 1 - \frac{1140}{1114};$$

$$= 0{\cdot}071,$$

In this case, therefore, 7·1 per cent. of the heat supplied to the engine was converted into work.

This result is almost exactly the same as that determined indirectly from measurements of the frictional and other losses in the wheel.

The weight of steam consumed per "I.H.P." per hour—

$$= \frac{33000 \times 60}{774 \times 1114 \times 0{\cdot}071}$$

$$= 32{\cdot}3 \text{ lbs.}$$

Having determined the thermal efficiency, as above, the mechanical efficiency can be obtained if the weight of steam used per hour and the brake horse power are known.

In the case of the wiredrawing calorimeter, Fig. 6, the steam

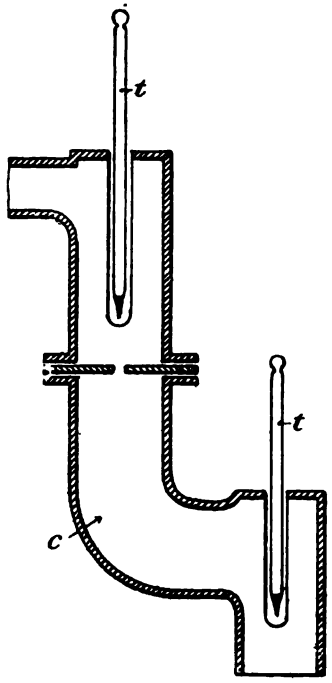

Fig. 6.—Wiredrawing Calorimeter.

discharges freely into the comparatively large chamber *c*, where the average velocity of the steam is so small as to become negligible. Assuming the same conditions as illustrated in Fig. 2, and that the steam is wiredrawn in a de Laval nozzle, the steam leaving the orifice will contain approximately 13 per cent. of moisture, the initial steam being dry and saturated. The jet of steam discharging into the chamber *c* will cause violent eddies within the chamber, and practically the whole of the kinetic

energy of the jet will be expended in creating these eddies and in overcoming frictional resistances. The kinetic energy of the jet will thus be converted into heat and this heat will dry and superheat the steam within the chamber. Under the conditions assumed for Fig. 2 the state of the steam leaving chamber *c* is shown by the point *f*, Fig. 2, and the area *r f e c m r* is equal to the area *a b c d a*. The portion of the heat spent in drying the steam is represented by the area *m c e n m*, and the portion spent in superheating it is represented by the area *n e f r n*.

If the steam had been initially wet it would have been superheated by a smaller amount, or not at all, according to the percentage of moisture it contained. When the thermometer *t*, Fig. 6, shows the steam leaving the calorimeter to be superheated, it is generally assumed that the whole of the water flowing with the steam from the wiredrawing orifice has been re-evaporated before the steam leaves the chamber *c*, and the calculation made to determine the initial dryness fraction of the steam is based on this assumption.

In making experiments with a wiredrawing calorimeter, I have sometimes seen drops of water issue from the calorimeter, although, according to the thermometer, the escaping steam was superheated. When the steam is very wet, intermittent choking with water of the wiredrawing orifice occurs, and the steam is blown out in puffs. On one occasion, I found that the number of puffs of steam per minute was approximately 100, and they occurred with great regularity. The revolutions of the engines at the time being 31 per minute. Under these conditions the steam issuing from the calorimeter was intermittently visible and invisible, although according to the thermometer it was superheated by from 50° to 60° Fah.

The percentage of water in the initial steam, as calculated from the readings of the two thermometers in the calorimeter, was, roughly, 2 per cent., whereas the actual percentage of water in the steam was probably several times this amount.

The above observations indicate that, apart from the uncertainty

as to the specific heat of steam, serious errors may arise if the readings of the two thermometers be alone observed. Care should always be taken to observe whether any water issues from the calorimeter, also whether appreciable choking of the wiredrawing orifice occurs (this can easily be determined by listening to the noise made by the discharging steam). If either of these occur a separator should be used in conjunction with the wiredrawing apparatus.

Although it has long been known that steam may be superheated by wiredrawing, it has up to the present been supposed that the maximum possible temperature of the wiredrawn steam was always less than the temperature of the steam before wiredrawing. Fig. 2 shows what has been believed to be the best possible case of wiredrawing, and it will be seen that the temperature of the superheated steam at f is lower than that of the steam before wiredrawing, namely t_b.

I have recently devised two methods of wiredrawing steam, both of which greatly increase the possible temperature to which the steam is superheated and both of which raise the temperature of the wiredrawn steam to above the temperature of the steam before wiredrawing. We have seen that dry steam becomes wet during wiredrawing. For example, in Fig. 7 the steam initially dry has the dryness fraction $\frac{dc}{de}$ after adiabatic wiredrawing to t_c.

In the case shown $\frac{dc}{de} = 0{\cdot}87$, and the steam contains 13 per cent. of water as it leaves the wiredrawing nozzle. Now if this water can be separated from the steam before the kinetic energy of the steam is converted into heat, it is evident that the temperature of the steam will be raised much higher than it would have been if the 13 per cent. of water had been re-evaporated at the expense of some of this heat.. Fig. 7 shows that the steam is superheated 260 degrees Fah. in this case, whereas it would have been only superheated by 90 degrees Fah. if the water had not been removed.

The question as to whether the water can be completely removed or not and the best means of removing it do not come within the scope of the present paper.

Another method of increasing the temperature to which the steam is superheated consists in supplying heat to the steam during the wiredrawing process. The wiredrawing nozzle may, for example, be steam jacketed with steam at the initial pressure. In the limiting case the steam will expand isothermally. Fig. 8 shows that the wiredrawn steam in this case is superheated by 86 degrees Fah., when the kinetic energy has been converted into heat, and again its temperature is higher than the initial temperature before wiredrawing. The steam leaving the nozzle is in this case superheated by $t_c - t_d = 48$ degrees Fah., before the kinetic energy has been converted into heat. If instead of isothermal expansion the steam simply remains dry during expansion, as indicated in Fig. 9, the steam will be superheated by 80 degrees Fah., due to wiredrawing from 365 to 215 lbs., absolute pressure. If the steam be wiredrawn, under these conditions, from 160 lbs. absolute pressure to atmospheric pressure, it will become superheated by 515 degrees Fah., as shown in Fig. 10, when the kinetic energy has been converted into heat.

Fig. 11 indicates roughly how this method may be applied to a de Laval nozzle.

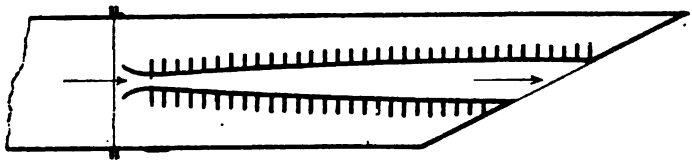

Fig. 11.—Steam jacketed de Laval nozzle.

This method may be carried out in a slightly different way. Let the steam flow through a pipe flattened for part of its length and let the contraction and re-enlargement of the pipe be very gradual. In this case, neglecting losses due to friction and eddies,

the pressure of the steam after flowing through the flattened part will be restored to approximately the initial pressure, but in the flattened portion of the tube the pressure will be much lower, because some of the pressure energy has been temporarily converted into kinetic energy. Now, if this flattened portion be steam jacketed with steam at the initial pressure, it is evident that heat will flow into the wiredrawn steam, and, in the ideal case, will raise its temperature to that of the initial steam. When the kinetic energy is reconverted into pressure energy the steam will be superheated.

The pressure-volume and entropy-temperature diagrams in this paper have been drawn carefully to scale by my chief assistant, Mr W. C. Houston, B.Sc., and I take this opportunity of cordially thanking him for this help.

Table of symbols used in the paper.

S = sensible heat of 1 lb. of steam at point indicated by suffix.

L = latent heat of 1 lb. of steam at point indicated by suffix.

t = temperature of steam in degrees Fah. at point indicated by suffix.

τ = absolute temperature of steam in degrees Fah.

K_p = specific heat of steam at constant pressure.

v = velocity of steam, in ft. per sec.

q = dryness fraction of steam.

J = mechanical equivalent of heat.

Discussion.

Prof. ARCHIBALD BARR, D.Sc. (Member of Council), thought it was very appropriate indeed that a paper of this kind should be read before the Institution, because he believed that the great advantages of Mr Macfarlane Gray's diagrams had not been fully recognised as yet by engineers. He was afraid, however, that he

could not altogether agree with some of the remarks which Prof. Watkinson made in his paper. First of all, with regard to the subject of wiredrawing in general, he thought Prof. Watkinson had rather confused the matter for those who were not very familiar with the subject, by not defining exactly what he meant by the wiredrawing of steam. It was stated in some parts of the paper that steam was superheated by wiredrawing, and in other parts that it became wet by wiredrawing. Of course, what Prof. Watkinson meant would be clear to those who already understood the subject, but probably not to those to whom it was new. It was customary to consider the wiredrawing process as not being complete until all the kinetic energy of the relative motions of the parts of the fluid had been transformed into heat; that was to say, until the steam was flowing with practically a uniform and small velocity. If wiredrawing was defined in that sense, they had a definite meaning for the term, but if wiredrawing was sometimes spoken of as being complete when the steam left the nozzle, and at other times only after it had expended its kinetic energy, he thought it would be confusing to those who were not perfectly familiar with the subject. Then he would remark also that in quite a number of passages Prof. Watkinson ought to have explained that he was dealing with ideal and not with real jets. For example, at the bottom of page 195, the dryness of the steam leaving the nozzle was calculated, on the assumption, not only as he (Prof. Watkinson) expressed it, that the wiredrawing was adiabatic, but also that it was frictionless. If there were any friction in the nozzle, and there must be some, the conditions were not those represented by the diagram. As to the diagrams in Fig. 3, he was afraid he could not at all agree with Prof. Watkinson. He should say that it was absolutely impossible to have stream lines of the forms that were there represented, and although there was an appearance like what they had in No. 3 of Fig. 3, it was not at all an appearance due to stream lines, as stated on page 196, but due to the state of wetness of the steam at different places. He should say that it was quite impossible to

Prof. A. Barr, D.Sc.

have in No. 3 a parallel stream, and yet the stream lines not axial; the stream lines certainly could not cross each other in the manner in which they were represented in the figure. Nor did he think that the forms that were shown in Figs. 1 and 2 could be correct, but perhaps Prof. Watkinson would exhibit the photographs from which he said these had been taken, if he had taken any such himself. On page 196 Prof. Watkinson mentioned that the advantage of the diverging nozzle in connection with injectors was discovered in 1869 by Schau. He thought it would have been more appropriate to remark that the advantages of the diverging jet in hydraulic and pneumatic appliances was brought prominently forward by the late Prof. James Thomson in 1852, but Prof. Thomson did not at that time claim any originality in the matter, because the principle of the diverging nozzle was, he believed, quite well known to the Romans, who had water metered out to them, it would seem, by the discharge from an orifice of given size, and who managed to defeat the ends of justice, not by any fraudulent alteration of the size of the orifice used, but by adding a diverging nozzle to the orifice they found that they could thus get a larger supply of water at the same annual charge. He thought that when the invention of apparatus depending upon the use of diverging nozzles was referred to, it should be borne in mind that Prof. Thomson laid down the principles and showed the applications for both inelastic and elastic fluids, long before the injector was brought into use. The remarks he had already made would apply to what was said at the top of page 197, where Prof. Watkinson stated that besides showing the work done by the steam, the diagrams showed the state of the steam. That was always on the assumption that there was no friction in the nozzles. He would have liked Prof. Watkinson to have given more particulars with regard to the results which he had obtained in experiments with the de Laval turbine. He stated on page 199 that the result calculated was almost exactly the same as that determined indirectly from measurements of the frictional and other losses in the wheel. He did not think it would be at all easy

to get any very exact determinations of the various losses in a de Laval turbine, for example, to distinguish between the loss due to friction in the nozzle and the loss by friction in the wheel. What Prof. Watkinson said with regard to wiredrawing calorimeters was, he thought, very important, and should not be forgotten, namely, that a wiredrawing calorimeter did not necessarily dry the whole of the steam, though it might dry a part of it. This should be carefully taken into account in experiments in which wiredrawing calorimeters were used. On page 202 Prof. Watkinson said: "Although it has long been known that steam may be superheated by wiredrawing, it has up to the present been supposed that the maximum possible temperature of the wiredrawn steam was always less than the temperature of the steam before wiredrawing." He did not think that he could quite agree with him there. If he included in the term wiredrawing the addition of heat from without, he thought no one would consider that there was any such limit to the temperature of the superheated steam as that to which reference was made in the paper. What Prof. Watkinson said as to Fig 7, that the steam was superheated 260 degrees Fah. might be referred to in connection with what had already been said regarding the misinterpretation of observations in wiredrawing calorimeters. The steam was not superheated to 260 degrees Fah., but only a part of it. What the author was referring to was a method by which steam might be separated into two parts, and one part be superheated at the expense of the condensation of the other part. He thought it should be made clear that it was not the whole steam that was superheated. It was not a method of superheating a given quantity of steam by wiredrawing, but only a method of superheating part of it at the expense of heat taken from another part. In the second method referred to, the steam was not superheated by wiredrawing simply, but by the wiredrawing and by heat supplied to the steam from without. He did not at all mean by those remarks that there might not be the germs of something very good in the suggestions which Prof. Watkinson had made, but if

calculations were made it would be found that it would be necessary in a nozzle of this kind, illustrated by Fig. 11, to get a rate of transmission of heat through the walls of the nozzle perhaps 50 times as great as that obtained in surface condensers in order to accomplish what was wanted. He did not think it was possible in this way to do any large amount of superheating or drying of the steam, especially because of the fact that, unless there was a large amount of loss in the nozzle from friction, which should be avoided, there would not be very intimate contact between the particles of steam and the sides of the tube, so that he was afraid that in this case there would be a difficulty in dealing with the individual particles of water, so to speak, and evaporating them, besides the fact that it would require a very large amount of heat to be passed through every square inch of the area of the nozzle. Further, he questioned the utility of superheating the steam after it had been expanded (or partially expanded) in the nozzle, at the expense of the high temperature heat of the jacket steam. Perhaps he might have seemed rather critical in the remarks he had made, but he did not at all intend to be so: on the contrary, he highly appreciated what Prof. Watkinson had done in having brought forward these very important considerations and having illustrated them in a very interesting way.

Mr Alexander Cleghorn (Member) said he would like to thank Prof. Watkinson for his interesting paper. He had read it through with a great deal of pleasure, and although he had nothing to add in the way of critical observation, he thought he might bring before the notice of the Institution that this was the first paper which it had received treating of the temperature-entropy diagram, as illustrative of the behaviour of steam. To students of thermodynamics, the temperature-entropy diagram was invaluable, as giving substance to the somewhat abstruse differential equations with which the subject was beset. He would therefore recommend it to the notice of all who wished to acquire a clear understanding of the heat exchanges which took place in steam or other gases.

Correspondence.

Mr R. H. Neilson observed that he had read the paper with great interest. Fig. 3, with the part of the paper referring thereto, was especially interesting. There was no doubt that in single-expansion turbines, such as the de Laval, the form of the nozzle was very important, and, in fact, there was practically no progress made with such turbines till de Laval brought out his diverging nozzle. It would be interesting to know how the jets were affected by placing nozzles so close together that the issuing jets touched each other, as there was an advantage in using such an arrangement in steam turbines. Prof. Watkinson stated that in actual steam turbines the stream of fluid leaving the buckets was not parallel to that entering the buckets. This was the case with the de Laval turbine, but in the Stumpf turbine the two streams were, he believed, approximately parallel. This result was obtained by arranging the nozzles in the plane of the wheel which was of the parallel flow type, the arrangement being like that of a Pelton water-wheel. With reference to Fig. 7, it seemed to him that the expression "heat carried away by the separated water," should be "kinetic energy carried away by the separated water." A little more explanation of the figure would also be welcome. If the area $kdabmk$ referred to 1 lb. of fluid, then the area $mcfnm$ referred to only 0·87 of a lb. It would, therefore, seem that there must be some difference of scale in the two parts of the figure.

Mr James Andrews (Member) remarked that from his experience, the quality of steam supplied to an engine was more often beyond the limit of a throttling calorimeter than within it, consequently he had never used this instrument except in combination with an effective steam separator, having connection from the calorimeter on the vertical outlet pipe from the separator. By this means a fair sample of steam could be obtained, well within the capabilities of the instrument, while the bulk of the water which was collected by the separator could be measured over any length of time desired. The calorimeter illustrated in the paper appeared to have a very large and perhaps too free a passage from the nozzle to the atmos-

Mr James Andrews.

phere, and he asked Prof. Watkinson whether that might not have some influence upon the action of the instrument, also whether he had tried wiredrawing the steam in two stages in place of one. Peabody's calorimeter and Carpenter's calorimeter, each had comparatively small outlets from the chamber into which the nozzle first discharged, so that the small amount of pressure in that chamber had to be taken into account. He had found while testing engines that where there were long steam pipes, the supply through a branch pipe was drier if throttled in two stages rather than one; that was, at the branch from the main steam range and again at the engine regulator valve. A similar result followed with comparatively short steam pipes by throttling at the boiler stop-valve and again at the engine. He had a direct-acting pumping engine running at double the speed when the steam supply was throttled at the main steam range and again at the engine cylinder, as compared with the steam being throttled at the main steam range only. The resistance of the pumps was constant, the pressure of steam in the main steam pipes and in the engine valve-chest were the same by gauge in both cases, but the steam pressure recorded on the indicator cards was greater in the first case than in the second. With regard to the form of nozzles, he had been making a number of experiments upon steam jets for the purpose of circulating steam in a heating coil, and also for transmitting the heat from the inlet steam to water in the coil by direct contact or mixture, and at the same time circulating the contents of the coil under pressure with a view of transmitting a greater amount of heat in a given time than was done in an ordinary coil. The one end of the coil was connected to the discharge side of an injector, while the other end of the coil was connected to the suction side of the injector, so that when steam was in the coil it was induced to circulate rapidly. When water was used as the heating medium it received its heat from the inlet jet of steam, and was caused to circulate at the same time. The results which he had obtained were much better than those obtainable with an ordinary coil, and it would appear that the same form of nozzle

was not applicable in both cases; while both the form and dimension of the nozzle seemed to have a considerable influence upon the results. As one of the principal objects of the paper was to illustrate the advantage of entropy-temperature diagrams in the treatment of such problems, he thought that Professor Watkinson would still further enhance its value by adding an entropy-temperature diagram to illustrate a steam jet pump, or the injector shown on Fig. 4.

Prof. W. H. WATKINSON, in reply, observed that Prof. Barr was in error in saying that in some parts of the paper it was stated that steam "became wet *by* wiredrawing." The statement in the paper was that "dry steam becomes wet *during* wiredrawing," which was strictly correct. Possibly those unacquainted with this branch of the subject might have some difficulty, as suggested by Prof. Barr, in reconciling this statement with the fact that it was superheated when the wiredrawing process was completed by the conversion of the kinetic energy into heat. A second reading, however, of the explanations given on pages 200 and 201, and elsewhere in the paper, should remove this difficulty. In calculating the dryness fraction of the steam leaving the nozzle, the flow was assumed to be frictionless, but it was improbable that the result would be materially vitiated by that fact. The ultimate temperature of the steam, after the kinetic energy had been converted into heat, was altogether independent of frictional effects in the nozzle. He regretted that he was unable to produce the photographs from which the diagrams in Fig. 3 were prepared, because, as stated in the paper, they had been reproduced from Kneass' work on the Injector. He had again perused the report of Prof. James Thomson's paper, read before the British Association in 1852, and he was unable to find any indication that the late Prof. James Thomson was aware in 1852 of the advantage of the diverging jet for compressible fluids, and he still believed that the discovery was due to Schau. The behaviour of water in flowing through nozzles was entirely different to that of

Prof. Watkinson.
steam. This was well illustrated by the fact that the best form of nozzle (No. 1 of Fig. 3) for a Pelton wheel was almost the worst form of nozzle for a de Laval turbine, and the best form for a de Laval turbine (No. 4, Fig. 3) was almost the worst form for a Pelton wheel. The experimental determination of the thermal efficiency of a de Laval turbine, referred to on page 199, of the paper, did not involve any special difficulties. Prof. Barr had apparently overlooked the fact that in the method proposed for increasing the temperature to which steam might be superheated by wiredrawing, the source of heat was steam. The novelty of the arrangement was due to the fact that by means of it wiredrawn steam might have a temperature higher than that of the source from which the heat had been supplied during the wiredrawing. So far as he knew the only other arrangement by which a similar result might be accomplished was that due to Hirn and described by Clausius in his "Mechanical Theory of Heat," page 349 (Browne's translation, 1879), from which Fig. 12 and the following description were taken:—"Let there be two cylinders A and B, of equal area, which are connected at the bottom by a comparatively narrow pipe. In each of these let there be an air-tight piston; and let the piston-rods be fitted with teeth engaging on each side with the teeth of a spur wheel, so that if one piston descends the other must rise through the same distance. The whole space below the cylinders, including the connecting pipe, must thus remain invariable during the motion, because as the space diminishes in one cylinder it increases in the other by an equal amount. First, let us suppose the piston in B to be at the bottom, and therefore that in A at the top; and let cylinder A be filled with a perfect gas of any given density and of temperature t_0. Now let the piston descend in A, and rise in B, so that the gas is gradually driven out of A into B. The connecting pipe through which it must pass is kept at a constant temperature t_1, which is higher than t_0, so that the gas in passing is heated to temperature t_1, and at that temperature enters cylinder B. The walls of both cylinders, on the other hand, are non-conducting, so

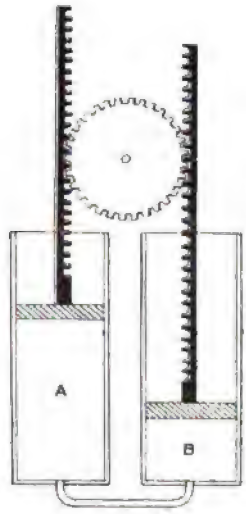

Fig. 12.

that within them the gas can neither receive nor give off heat, but can only receive heat from without as it passes through the pipe. To fix our ideas let the initial temperature of the gas be that of freezing, or 0°, and that of the connecting pipe 100°, the pipe being surrounded by the steam of boiling water. It is easy to see what will be the result of this operation. The first small quantity of gas which passes through the pipe will be heated from 0° to 100°, and will expand by the corresponding amount, *i.e.*, $\frac{100}{273}$ of its original volume. By this means the gas which remains in A will be somewhat compressed, and the pressure in both the cylinders somewhat raised. The next small quantity of gas which passes through the pipe will expand in the same way, and will thereby compress the gas in both cylinders. Similarly each successive portion of gas will act to compress still further not only the gas left in A, but also the gas which has previously expanded in B, so that the latter will continually tend to approach its initial density.

Prof. Watkinson.

This compression causes a heating of the gas in both cylinders; and as all the gas which enters B enters at a temperature of 100°, the subsequent temperature must rise above 100°, and this rise must be the greater, the more the gas within B is subsequently compressed. Let us now consider the state of things at the end of the operation, when all the gas has passed from A into B. In the topmost layer, just under the piston, will be the gas which entered first, and which, as it has suffered the greatest subsequent compression, will be the hottest. The layers below will be successively less hot down to the lowest, which will have the same temperature, 100°, which it attained in passing the pipe. For our present purpose there is no need to know the temperature of each separate layer, but only the mean temperature of the whole, which is equal to the temperature that would exist if the temperatures in the different layers were equalized by a mixing up of the gas. This mean temperature will be about 120°."

Referring to Mr Neilson's remarks in connection with Fig. 7, the area *c b h g c* represented the amount of heat carried away by the 0·13 lbs. of separated water, and not the "kinetic energy carried away by the separated water." The area *m c f n m* referred to 0·87 lb. of steam as mentioned by Mr Neilson, but the scale of the diagram was the same throughout. In answer to Mr James Andrew's question, he had never made any special experiments on the wiredrawing of steam in two or more stages. Fig. 6 was reproduced from a freehand sketch and was not a scale drawing of the calorimeter used in the experiments. The instrument used was of the usual proportions. The case mentioned by Mr Andrews in which—"He had a direct-acting pumping engine running at double the speed when the steam supply was throttled at the main steam range and again at the engine cylinder, as compared with the steam being throttled at the main steam range only," all the other conditions remaining the same, was very interesting. Possibly the observed effect might have been due to the reservoir action of the pipe connecting the main steam range with the engine.

The CHAIRMAN (Mr Archibald Denny, Vice-President), thought this paper very valuable, especially when taken in conjunction with Mr Andersson's paper on "The de Laval Turbine." It would have been very appropriate to have discussed the two papers together, as it would have been a help to both. He felt certain that members present would join with him in awarding Prof. Watkinson a most hearty vote of thanks.

The vote of thanks was carried by acclamation.

SPEED CONTROL OF ELECTRIC MOTORS WHEN DRIVEN FROM CONSTANT-PRESSURE MAINS.

By Mr W. B. Sayers (Member).

Read 3rd March, 1903.

It is getting to be generally recognised that one of the great sources of advantage and economy from the use of electric motors in place of shafting and belts, will prove to be the facilities which continuous current motors offer for economically changing speed, especially for readily making fine adjustment of speed on individual machines deriving their power from a common source.

So far as I am aware—apart from the electric motor—there is no means known of deriving a variable speed of rotation from a source of power characterised by constant speed of rotation which is not either clumsy, unmechanical, or wasteful, or all of these combined. The familiar ordinary step cone pulley is really a very unsatisfactory device for the purpose. Taking, at random, a pair of step cone pulleys, I find that the steps and speeds which can be obtained as ordinarily arranged are something like those given in the following table:—

A 100 revs.			B.				B revs.
12½″	diameter	on to	17″	diameter	—ratio,	1·36 -	73·5
14″	,,	,,	15½″	,,	,,	1·11 -	90
15½″	,,	,,	14″	,,	,,	·9 -	111
17″	,,	,,	12″	,,	,,	·735 -	136

This, it will be agreed, is far removed indeed from a smooth gradation of speed, but it is a fair example of what can be done with cone pulleys. Now, if to obtain the most economical results a certain work had to be performed by a machine running at 85 revolutions per minute, and the machine was fitted with this

pair of cone pulleys, the desired number of revolutions could not be obtained, and as 90 revolutions might be just too fast, the consequence would be that the speed of 73·5 would be used, and the work performed at a speed of 15 per cent. or so slower than it might be done if a fine speed gradation between 73·5 and 90 revolutions were provided. Similarly, if the best speed for another job was, say, 100 or 105 revolutions, and for another 125 revolutions, the probability is that each job would be run at a slower speed than it might have been where the means of obtaining intermediate speeds not lacking. It follows from this consideration that where variable speed is required, but is only obtainable by such means as reversed cone pulleys, the machine will always be run slower than the best speed — for the simple reason that generally too high a speed cannot be used. A perfectly smooth gradation can, of course, be obtained by using reversed cones with some guiding pulleys to keep the belt in the desired position, there is also the well-known contrivance consisting of a disc and wheel, the latter being driven by friction from the surface of the disc at varying distances from the centre. There are many other devices, but none are satisfactory for ordinary purposes.

I shall now proceed to consider some of the conditions and limitations governing variable speed electric motors :—

Any given continuous current electric motor having its magnets normally excited and supplied with current at a fixed pressure will run at a certain definite speed.

If, then, in a given case it be assumed that the motor is shunt wound, and that the magnet coils are adapted to give normal excitation with the pressure under consideration, it may be said that a shunt motor connected to a constant pressure supply (as for instance the town mains) will run at a certain speed, and this speed may be called the natural or normal speed of the motor.

In order to vary the speed, the excitation, that is the strength of the magnetic field must be varied—which can be done by means of a rheostat in the shunt circuit; or the effective pressure or voltage applied to the armature windings must be varied. With

fixed excitation, the speed is proportional to the pressure applied to the brushes, and with fixed pressure at the brushes it is inversely proportional to the degree of excitation.

Normal excitation of the field magnets nearly corresponds for practical purposes with *maximum* excitation. Therefore, as the speed is inversely proportional to the excitation, it follows that normal excitation corresponds with practically minimum speed. As a result of these facts, speed cannot, for practical purposes, be reduced by varying excitation from the normal, but it can be increased, and that to an extent dependent upon various conditions —especially the size and design of the motor.

In order to reduce speed the pressure at the brushes must be reduced. This may be accomplished in two ways: *firstly*, by passing the current through resistance coils; *secondly*, by the use of a motor-generator, and if the amount of reduction of pressure is to be varied, then the motor-generator must be one having a variable ratio of transformation. This is accomplished in practice by varying the excitation of the fields of one part of the motor-generator. The reduction of speed by means of resistance in series with the armature is objectionable for several very strong reasons: *firstly*, the reduction is accomplished by wasting energy; *secondly*, the wasted energy appears as heat in the resistance coils, rendering it necessary to make them comparatively large and to provide means for getting rid of the heat generated; *thirdly*, the amount of reduction of pressure resulting from a given resistance in series with a motor depends upon the current passing. In consequence of this the use of series resistance destroys the valuable self-regulating quality of a shunt motor. In some cases where the load is steady and energy very cheap, the use of series resistance may be allowable but it is generally to be avoided.

The method of reducing speed by using a motor-generator has been patented and is known as the Ward-Leonard system of motor control. It has the great objection that the motor-generator will cost, probably, 1½ times as much as the motor. It will occupy considerable space and when in use will reduce the

efficiency of the motor by the amount of energy required to drive it.

In the Ward-Leonard system as carried out, the motor is wound for double the voltage of the supply, and the motor-generator is used to reduce the pressure to any required degree down to nearly zero by an opposing electro-motive force, or to raise it up to double or any less value by an additive E.M.F.

There is one example of the system in practical operation at Messrs Lloyd's in Salisbury Square, London. By the kindness of Messrs Geipel & Lange, the Ward-Leonard representatives in this country, and of Messrs Lloyd of Salisbury Square I have seen the plant referred to. The motor is a 50 B.H.P. geared to a rotary newspaper printing press, and from the conversation I had with Mr Brabb, the attendant, it seems to be quite satisfactory in operation. This is interesting to know, because the variable part of the motor-transformer works under very trying conditions, inasmuch as the field is varied through the whole magnetic range —from full excitation in one direction right through zero value and up to full excitation in the opposite direction, with full load or even considerable overload currents through the armature.

When the speed of the main motor in the Ward-Leonard system is lowered by an opposing E.M.F., the variable part of the motor-generator is the motor driving the part with fixed excitation as a generator, thus putting back into the circuit a portion of the energy drawn by the motor circuit. When the speed of the main motor is increased by an additive E.M.F. the part with fixed excitation is the motor and the variable part is acting as a generator. The motor-generator is in fact a reversible long-range booster.

The shunt motor with rheostat in the shunt circuit has the valuable property of giving variable speed without drawbacks, and I propose now to examine the method, its governing conditions, and the limiting factors to which it is subject.

The variable shunt motor has the quality of having a speed variable at will through a limited range, with any desired fineness

of gradation from two or three steps to a perfectly smooth and regular gradation from the highest to the lowest speed without loss of efficiency.

The Limits of the Speed Range.

The speed of a shunt motor when connected to a constant pressure supply and running "light" can be increased indefinitely by reducing the magnetic field—in other words by adding resistance to the shunt circuit. The actual limit when running "light" will, in most cases, only be reached when the armature bursts. When running under load the point at which a limit of speed will be reached will depend upon the amount of the load as compared with the load which the motor could satisfactorily carry at normal excitation; and whether the limit is due to the heating of the armature or to destructive sparking at the commutator or other causes, will depend upon the design of the motor and its brush gear. I had hoped to have been in a position to have embodied in this paper results of experimental trials showing when the limit was reached in specific cases, but this I am unable to do. I hope, however, that some such information will be forthcoming during the discussion.

The law for the limit of output of a motor when speed is varied by varying the excitation, appears to be that the output limit is a constant quantity, since the maximum armature current must remain practically constant and the torque vary as the product of current into degree of excitation or "magnetic field" N; that is:—

$$\text{torque} \propto C \times N$$

$$\text{speed} \propto \frac{E}{N}$$

$$C \times N = \text{rate of doing work in Watts} = \frac{\text{H.P.}}{746}.$$

If the current remains constant, and E (by premises) is also constant, the work done is constant; also, the torque is proportional to magnetic field N, and the speed inversely proportional to magnetic field.

$$\left.\begin{matrix}\text{Size in H.P.}\\ \text{for variable}\\ \text{speed motor.}\end{matrix}\right\} = \left\{\begin{matrix}\text{Size in H.P. of standard speed motor to do the maximum work.}\end{matrix}\right\} \times \frac{\text{Maximum speed}}{\text{Minimum speed}}.$$

$$\left.\begin{matrix}\text{Per cent.}\\ \text{efficiency}\\ \text{of variable}\\ \text{speed motor.}\end{matrix}\right\} = 100 - x\left\{\begin{matrix}\text{Percentage losses of motor at standard speed and output.}\end{matrix}\right\} \times \frac{\text{Standard output}}{\text{Variable speed output}}.$$

Where x is = a quantity depending upon the amount of reduction of core losses and excitation expenditure, also upon the effect of the "space factor" in the C^2R losses. For speed ranges not exceeding 50 per cent., its value will be near unity; for larger ranges it may be considerably less.

Having regard to the heating limit alone, the maximum load at any speed may safely be taken as that which will cause full load current in the armature. With respect to sparking, the limit would depend in the first place upon the extent to which commutation depended upon a reversing field. In most motors below 15 or 20 H.P. the commutation is dependent on the varying area of contact (and consequent varying resistance at the contact) between the sectors of the commutators and the carbon brushes, and in these we may conclude that the sparking limit will also be reached with the full load armature current. It may be noted here that the brushes of tramway motors and of crane and lift motors which have to run in either direction have their brushes set midway between the pole tips, and that being so they depend entirely upon the action of carbon brushes for commutation. The case of the variable part of the motor-generator of the Ward-Leonard plant, already referred to, exemplifies the fact that the full load armature current can be commutated independently of the strength of field in motors up to 25 H.P. running at 1000 revolutions; but the speed in this case remains nearly constant. The question whether or not the peripheral velocity of the commutator will introduce a speed limit which would be reached before any other, must depend upon the degree of perfection of the condition of the commutator and the point at which the

brushes fail to make continuous contact with the commutator owing to their having too much inertia to follow up such irregularities as exist on the commutator surface.

The Effect of a Given Speed Range on the Size of the Motor Required.

Some motor manufacturers state that the speed of their standard motors can be increased 15 per cent. or so by the use of shunt resistance, It will be interesting to hear, as I trust we shall, just what they mean by this. If a motor is sold to develop 10 H.P. at 900 revolutions and to have its speed increased up to 15 per cent., it will probably be working on its overload margin when speeded up. If it is determined that the overload margin is not to be encroached upon, then, assuming that the power is proportional to the speed and that 10 H.P. is required at the lower speed, the motor must be capable of developing 11½ H.P. at the higher speed, which means that it would also be capable of doing the same work at normal speed. In a great many cases 15 per cent. increase above standard speed would not be objectionable and in these we may take it that where a 15 per cent. speed variation is sufficient, a motor cabable of doing the maximum power will fill the bill. It must simply be geared or connected to its work so as to run 15 per cent. over its normal speed for maximum speed of the driven plant. It will at once be seen that the question of what is the highest speed allowable for each size and type of motor without endangering its reliability, becomes of great importance when speed variation by means of a shunt rheostat is adopted.

The speeds, which years of costly experience has gradually settled into standards, are approximately as under :—

Horse-Power.	Speed in revs. per min.
3	1000 to 1250
5	950 to 1100
10	850 to 1000
15	700 to 900
20	650 to 750
50	500 to 650
100	400 to 500

If we exceed these speeds materially while exacting anything like full load from the motor we shall do so at greater or less risk (according to circumstances) to the reliability of the drive.

I shall now deal with the question of the effect of the requirement of a variable speed by means of a shunt rheostat, where considerations of prudence demand that the maximum speed of the motor shall not exceed the standard which experience has shown to correspond with maximum reliability consistant with economy in first cost. Supposing a speed variation of 25 per cent. was required on a 15 H.P. motor. The speed at 15 H.P. must not exceed, say, 750 revolutions, but reducing it by 25 per cent. gives 560 revolutions, and it follows from what has been said before that the motor which will do 15 H.P. at 750 revolutions with reduced excitation, will also be capable of doing 15 H.P. with normal excitation; therefore, on the reasoning I have been following, the motor would be one rated at 15 H.P. for 560 revolutions, and as a constant speed motor would be capable of doing 17½ H.P. if standard speed be taken at 650 revolutions; or 20 H.P. if the standard is taken as 750 revolutions per minute.

In the following table are given the sizes of motor required in terms of rated H.P. at normal speed, when speeds variable through ranges of 15 per cent. and 33 per cent., and 2 to 1 and 3 to 1 are required; taking the condition that the maximum power is required from the motor when running at maximum speed, and that the maximum speed at which the motor is to be run corresponds with the highest of the figures I have given as standard.

It has been stated that normal excitation corresponds nearly with maximum. It may now be stated that it is usually impossible to reduce the speed of an ordinary shunt motor by increasing the excitation, this could be done in most cases by connecting the field coils in parallel; when it is done the exciting current will be quadrupled, and the heat generated in the coils quadrupled. The motor could not, therefore, be worked long in this condition without danger of burning the field coils, but it could be so worked for a limited period.

H. P. Required at Maximum Speeds.	15 % Variation.		33 % Variation.		2 to 1. Variation.		3 to 1. Variation.	
	Armature Wound for	Size of Motor equal to	Armature Wound for	Size of Motor equal to	Armature Wound for	Size of Motor equal to	Armature Wound for	Size of Motor equal to
	H.P. Revs.	H.P. Revs.	H.P. Revs.	H.P. Revs.	H.P. Revs.	H.P. Revs.	H.P. Revs.	H.P. Revs.
3			3 @ 840	4 @ 1100	3 @ 500	5 @ 1000	3 @ 333	10 @ 1000
5	5 @ 930	6 @ 1000	5 @ 660	7·5 @ 1000	5 @ 500	10 @ 1000	5 @ 250	15 @ 750
10	10 @ 635	12 @ 750	10 @ 495	15 @ 750	10 @ 375	20 @ 750	10 @ 217	30 @ 650
20	20 @ 635	20 @ 750	20 @ 430	30 @ 650	20 @ 325	40 @ 650	20 @ 217	60 @ 650
50	50 @ 550	60 @ 650	50 @ 330	76 @ 500	50 @ 250	100 @ 500	50 @ 166	150 @ 500
100	100 @ 425	120 @ 500	100 @ 330	150 @ 500	100 @ 200	200 @ 400	100 @ 100	300 @ 300

I do not know of any cases in practice where this fact could be taken advantage of, but they may exist. There will be cases where, at the highest speeds, very little power will be required, and in these it would probably be satisfactory to run up above the region of "standard" speeds. In such cases the perfect balance of the armature and truth of the commutator becomes a *sine qua non*.

I have a case of a 3 H.P. motor driving a fan direct at 2700 revolutions per minute. This motor has been at work for three years, and is giving satisfaction. Although it works perfectly when in order, it is a question whether it is not a little too delicate for an ordinary tradesman to keep in good condition.

The Effect of Speed Variation on the Efficiency.

Consider now what alteration must be made in a motor wound for a constant speed in order to obtain speed variation by means of variable excitation, without on the one hand exceeding the standard speed, or, on the other, resorting to abnormal excitation of the fields; it will be found that the number of turns in the armature winding must be increased just in proportion to the range of speed variation required. If normal excitation would give 1000 revolutions, and a range of from 500 to 1000 revolutions per minute is wanted, the turns on the armature must be doubled. This means that the armature at standard speed has a cross section of iron sufficient to carry twice the field that is required, and a winding having, say, five times* the resistance it would have if no reduction from standard speed were required.

Compare now the efficiency of a motor wound for a constant speed with that of one capable of doing the same work at the same speed, but also capable of having its speed varied downwards through a range of 33 per cent., and take a 10 H.P. motor at 1000 revolutions for the constant speed one. Then the size of the

* The resistance would be only four times greater if it were not for the reduction of what Mr Hobart calls the "space-factor," resulting from the use of the smaller wire.

variable speed motor will be $10 \times \frac{3}{2} = 15$ H.P., and its standard speed may be taken at 750 revolutions per minute. This speed is not to be exceeded, so the requirements are a motor to run at from 500 to 750 revolutions per minute, and to be capable of working at 10 H.P. at the latter speed.

The composite list prices of standard speed motors with normal windings, taking six of the best makers, are as follows :—

10 H.P. at about 1000 revs.,	£83	15 H.P. at about 750 revs.,	£114
Add :—Shunt varying rheostat,			3
Allow for special winding of armature,			3
			£120

Take the efficiency of the two motors when doing full load with normal excitation at :—For the 10 H.P., 85 per cent. ; and for the 15 H.P., 87 per cent.

It will not be far wrong to assume that the various losses are made up as follows :—

10 H.P. Motor at 1000 Revolutions—

Armature (C^2 R),	5 per cent.	436 watts.	
Commutator and brushes,	2	,,	175 ,,
Hysteresis, eddies, and friction,	4	,,	350 ,,
Field excitation,	4	,,	350 ,,
	15	,,	1311 ,,

Total watts absorbed by motor when doing 10 B.H.P.

$$= 746 \times 10 \times \frac{100}{85} = 8750.$$

15 H.P. Motor at 750 Revolutions—

Armature (C^2R), - -	4·5 per cent.	580 watts.
Commutator and brushes, -	1·5 ,,	193 ,,
Hysteresis, eddies and friction,	4 ,,	515 ,,
Field excitation, - - -	3 ,,	386 ,,
	13·0 ,,	1674 ,,

Total watts absorbed by motor when doing 15 B.H.P.

$$= 746 \times 15 \times \frac{100}{87} = 12{,}800.$$

Compared with the 15 B.H.P. standard speed motor, the several losses in the variable speed motor will be affected in different ways for the conditions under consideration. I will take them in order for 10 B.H.P. at maximum speed, namely, 750 revolutions:—

Armature (C^2R), $\propto \left(\text{Ratio speed variation.}\right)^2 \times \left(\frac{C}{C_1}\right)^2 = 580 \times \left(\frac{100}{66}\right)^2 \times \left(\frac{10}{15}\right)^2 = 580$

Commutator and brushes, - - 193 say - - 120

Hysteresis $\propto B^{1\cdot6} \times n$ } 515 { $= 200 \times \left(\frac{66}{100}\right)^{1\cdot6} = 106$

Eddies - $\propto B^2 n^2$ } { $= 200 \times \left(\frac{66}{100}\right)^2 = 88$

Friction - - } { $= 115 \times 1 = 115$

Field excitation including waste in rheostat, say $386 \times \cdot 45$ = 174

1083

Note that there is a reduction both in the hysteresis and eddy current losses in the armature, so that, probably, somewhat more load could be taken from the motor without causing overheating of the armature.

Efficiency at 10 B.H.P., 750 revolutions, $\frac{7460}{7460+1083}$, say 87 per cent., or substantially the same as the 10 B.H.P. at 1000 revolutions.

At 500 revolutions and 6·6 B.H.P.—that is, taking the condition that the power required from the motor is proportioned to the speed—

Armature (C^2R), -	$= 590 \times \left(\frac{6{\cdot}6}{10}\right)^2$	$= 256$
Commutator and brushes,	$120 \times \frac{500}{750}$	$= 80$
Hysteresis, - -	$106 \times \left(\frac{100}{66}\right)^{1{\cdot}6} \times \frac{500}{750}$	$= 133$
Eddies, - - -	$88 \times \left(\frac{B}{B\frac{500}{750}}\right)^2 \times \left(\frac{N\frac{500}{750}}{N}\right)^2$	$= 88$
Friction, - -	$115 \times \frac{500}{750}$	$= 77$
Field excitation, -	$386 \times \frac{1}{1}$	$= 386$
		1020

Efficiency at 6 B.H.P., 500 revolutions, $\frac{4476}{4476+1025} = 82$ p. cent.

Note that the motor is capable of doing 10 B.H.P. at this speed, that is, 500 revolutions.

It will be of interest in comparison with the foregoing to consider the effect on the efficiency when the speed of an ordinary standard motor is increased: say, a 10 B.H.P. at 1000 revolutions. Take the case of a 50 per cent. increase of speed, the power to be 10 H.P. at 1500 revolutions per minute. The various losses will vary approximately as follow:—

Armature (C^2R), - - - - - -		$= 436$
Commutator and brushes,	$175 \times \frac{1400}{1000}$	$= 246$
Hysteresis, - -	$106 \times \left(\frac{1000}{1500}\right)^{1{\cdot}6} \times \frac{1500}{1000}$	$= 111$
Eddies, - -	$125 \times \left(\frac{B}{B\frac{1}{1{\cdot}5}}\right)^2 \times \left(\frac{N\frac{1}{1{\cdot}5}}{N}\right)^2$	$= 125$
Friction, - -	$100 \times \left(\frac{1500}{1000}\right)$	$= 150$
Field excitation, -	$350 \times {\cdot}45$	$= 158$
		1226

Efficiency, $\frac{7460}{7460+1226} = \frac{7460}{8686} = 86$ per cent.

If it be assumed that when running at 1000 revolutions the power required will be proportionately less than when running at 1500 revolutions per minute, then 6·6 H.P. is obtained and the losses will be affected as under:—

Armature C^2 R.	$436 \times \left(\frac{6{\cdot}6}{10}\right)^2$	=	190
Commutator and brushes	say		150
Hysteresis Eddies Friction		=	350
Field excitation		=	350
			1040

$$\text{Efficiency} = \frac{746 \times 6{\cdot}6}{(746 \times 6{\cdot}6) + 1040} = \frac{4900}{5940} = 82{\cdot}5 \text{ per cent.}$$

Efficiency of 10 B.H.P. motor (size 15 B.H.P. at 750 revolutions) speed variable from 500 to 750 revolutions by means of field excitation:

6·6 B.H.P. at 500 revs. 81 per cent.
10 B.H.P. at 750 revs. 87 per cent.

Efficiency of 10 B.H.P. motor (size 10 B.H.P. at 1000 revolutions) speed variable from 1000 to 1500 revolutions by means of field excitation:

6·6 B.H.P. at 1000 revs. 82·5 per cent.
10 B.H.P. at 1500 revs. 86 per cent.

These calculations show, so far as they go, that the variation of speed by varying excitation has very little effect on the efficiency whether a normal sized motor be used and run over speed, or a larger motor keeping the speed within the figure generally accepted as standard for the size of motor.

In the foregoing examples it has been assumed that the power demanded from the motor is greatest at the highest speeds. There will be very many applications for electric drives where

this will not be true, and in these the actual power requirements at the various speeds must be taken into account in determining the size of motor necessary for the drive.

MECHANICAL SPEED GEAR COMBINED WITH VARIABLE SPEED ELECTRIC MOTOR.

It will occur to many that in order to avoid the necessity for a specially large motor, speed variation might be obtained by means of step-cone pulleys, or spur wheel speed-gear, or both, and the fine gradation from the speed given by one combination of gears to the next obtained by field variation, in which case 25 or 30 per cent. variation or less would often suffice, and not much, if any, increase in the size of motor would be required. Such combinations will doubtless find a very extensive field of application.

Multiple Voltage System.

In cases where there are a number of machines requiring a large range of speed variation, it may be advantageous to distribute at more than one voltage. The simplest case would be, of course, to distribute on the three-wire system, thus giving two voltages, one double of the other. Similarly a four or five (or more) wire system could be employed, giving the motors as many different speeds, but necessitating, of course, the complication of extra wires and switch gear. Such systems will require balancers or motor transformers in order to maintain the required differences of pressure between the several distributing cables. The capacity or output of the balancers will depend upon the extent to which in the particular case the demand made by the various motors on the several voltages will be liable, in spite of careful forethought and arrangement, to be out of balance. The balancers referred to are motor transformer sets capable of maintaining required differences of pressure between the several mains by drawing make-up current from the mains which are fed at constant pressure from the generators, or of putting surplus energy back into those mains. When multiple generating units are used such balancers may be dispensed

with. With this multiple voltage system the variable speed motor could be used to give the fine gradation of speed, so as to bridge over from the speed at one voltage to that at another.

The complication introduced by anything beyond the three-wire system is an important consideration, and before deciding on the multiple voltage system, the cost of obtaining the required range of speed variation by means of variable speed constant pressure motors, either alone or combined with mechanical speed changing gear, should be very carefully gone into.

Discussion.

Mr H. A. Mavor (Member) thought those who were specially interested in this subject must especially thank Mr Sayers for having read the paper before an audience largely composed of people who must have found it a little difficult to follow. He begged to be excused if he attempted to summarize what appeared to him to be the important points to the Institution in the paper. First of all, the last remarks made by Mr Sayers were worth very careful attention. The possibility of speed variation in driving machine tools was a subject which would at once appeal to them, but the great difficulty was to get any important speed variation on what was called the standard motor, which was not likely to be suitable for such purposes. Taking Mr Sayers' formula and transposing it, then—

$$\frac{\text{Variable speed motor}}{\text{Maximum speed}} = \frac{\text{Standard speed motor}}{\text{Minimum speed}}.$$

That was to say, a motor must be made big enough to do the work at the minimum speed. The points which required attention regarding a motor which would be useful for varying speed, were very much the same as the points that required attention in a motor which would be called upon to run at varying loads. Those points were very easily stated. The high speed motor must have a light core, with as little iron in it as possible, and it must have the

Mr H. A. Mavor.

teeth and the slots, as shown by Mr Sayers' sketch on the blackboard, as shallow as possible. In fact, for the highest possible speed, it was better not to have conductors in the slots at all. To run at a high speed, it was necessary to have a smooth core. Mr Sayers had called attention to the necessity for a good commutator for good high speed running. The prime point in the matter was the commutator difficulty, and the whole thing in his opinion depended upon the reactance voltage of the windings, and that, in short meant that there must be as many sections as there were turns in the winding, if at all practicable, and the nearer that one could come to that the better. The voltage reactance had a great many elements in it, but, simply expressed, it depended upon the output of the machine, which was the same thing as horse power in other units:—

$$\left.\begin{array}{l}\text{Reactance voltage per section of armature winding in volts}\end{array}\right\} = \frac{\text{Watts input} \times \text{turns per section} \times \left\{\begin{array}{l}\text{Magnetic field produced by winding per Cr length of wire.}\end{array}\right.}{\text{Diameter of armature} \times \left\{\begin{array}{l}\text{Average density of flux in air space taken over the whole surface of armature.}\end{array}\right.}$$

That was the whole thing—if a machine was wanted which could vary in speed very much it must be big in diameter, and it must have a small number of turns per section of the armature, a shallow slot, and a large flux density.

Mr Sayers—That was if inductive commutation were wanted; if carbon brushes were depended upon solely.

Mr Mavor—The point which required attention was, whether the commutator depended on the magnets or the brushes. He thought, that if the motor was designed specially for change of speed it was quite practicable, and better than any elaborate appliances of multiple voltage, or of motor generators, or any such appliances which very much complicated matters in running, and

added very materially to the prime cost. It was quite possible to do everything that was required by simple means.

Prof. MAGNUS M'LEAN, D.Sc. (Member), said Mr Sayers had certainly pointed out at least three different systems by which to get variable speed motors, and he wished, for the sake of the meeting, that he had described one of them in detail. He referred to the Ward-Leonard system. It was very complicated, and, as Mr Sayers pointed out, very expensive, because it entailed, not only the motor whose speed they wanted to vary, but also another motor and dynamo, so that the original outlay was considerable. One of the other methods that Mr Sayers referred to, namely, the method of putting resistance in the armature was, he thought, perhaps not one that should be so summarily dismissed, especially if the variations of speed were not to exceed from 20 to 30 per cent. of the standard speed of the motor. He thought it would be found that if the excitation were kept constant and resistance put into the armature, the percentage of the reduction of speed would not, be very different from the percentage of the reduction of efficiency so that if a reduced speed of 15 per cent. in the motor were required the efficiency of the motor would be reduced by not much more than that, provided the input was taken into account as constant and not the output. There were very many cases where practically the input as constant was the main thing, and not the output. If, for example, a motor was wanted to drive a machine at 10 per cent. less efficiency, it might do so on the output side, doing 10 per cent. less work, so that the same percentage of input at the two speeds would obtain. In that case, the resistance in the armature was quite a good and efficient way of reducing the speed of motors. He had made a few experiments in his own laboratory in this way on a 5 horse power motor, and found practically the results which he had mentioned. Keeping the input constant at normal speed, putting resistance into the armature, and arranging the output so that the input was the same as before, he found that at three-quarters full load of the motor, the series armature resistance that reduced the speed 10

per cent. reduced the efficiency 13 per cent; and the series armature resistance that reduced the speed 22 per cent., reduced the efficiency 30 per cent. Therefore, he thought, that was not a method which should be entirely ignored, if methods were to be found out by which variable speed was to be obtained. He believed that a combination of shunt regulation resistances and series armature resistances would be found to meet all the requirements of variable speed motors, except special cases like that mentioned by Mr Sayers.

Mr T. Blackwood Murray, B.Sc. (Member), said he had listened with great interest to Mr Sayers' paper, because he had done a considerable amount of work in connection with motors having a very large variation in speed, for motor-car work. He had also experienced difficulty, as mentioned by Mr Sayers, in connection with the brushes. This point could be got over to a certain extent by using multiple brushes. There was a risk in reducing the field too far, which he had sometimes experienced in experimenting. It was possible to have the back magnetising effect of the armature overcoming the field coils and actually starting the motor in the opposite direction. He had found it necessary, if he wanted a large variation, to have a very large air gap so as to get a fairly stable field. This was a point which also increased the exciting current, and therefore reduced the efficiency. There was one type of variable speed motor not mentioned by Mr Sayers which had been used by a number of makers of recent years. Messrs Egger, of Vienna, were, he believed, about the first to introduce them. It was a simpler method than the Ward-Leonard, and capable of a variation of from 1 to 4. That was obtained by fitting the armature with two windings and two commutators, and then connecting the armature windings, either in parallel or in series, as desired. For motor-car work, of course, the series coupling was very valuable, as it gave twice as great a starting torque for the same current. The efficiency was correspondingly low, but that did not matter, as the motor was not generally running for a long period at low speed. He had also

found it advisable not to depend upon the carbon brushes for reversing. As Mr Sayers said, when the field was reduced so far, it was difficult to get reversal, but he had used a system of separate reversing magnets energised by the main current, which proved thoroughly efficient, and the motor could be run almost as well with copper brushes as with carbon brushes. The motor ran equally well in either direction, as the reversing field, of course, was reversed, being in circuit with the main winding. This system had another advantage in motor-car work, as by its use a very much lighter motor was obtained for the low speed. If variation in the field alone were depended on to vary the speed, sufficient weight would require to be provided in field magnets, and in their armatures, to carry the necessary magnetic flux to give the low speed. This would mean roughly, doubling the weight of iron in the field magnets and armature to get the same low speed.

Mr W. A. Chamen (Member of Council) said Mr Sayers' paper contained a great deal that would be found useful for reference from time to time. The best contribution that he could make to the discussion would be to ask if Mr Sayers had ever had his attention drawn to one or two methods which he did not think had been mentioned, of varying the speed of continuous current motors. One rather ingenious arrangement had been elaborated, some years ago, by Mr A. H. Pott, an old colleague of his in London, in which there were unequal voltages between the wires of a three-wire system of supply. Glasgow had a three-wire system with 250 volts between the first and the middle, and 250 volts between the middle and the other wire. Mr Pott's proposal was to have, say, 300 volts between the first and the middle wire, and 200 volts, to make up the 500, between the other two. He proposed to get a variation of speed by means of a shunt regulation, and, further, to change the armature across from the 200 volts to the 300, and from the 300 to the 500 volts, thus giving three different voltages. It might be that this could not be done as in the Ward-Leonard system, by easy grades. There might have to be jumps while the changes were effected, but, for certain

Mr W. A. Chamen.
purposes, it was a very useful arrangement, and in connection with it also, it had been proposed—and he thought in some cases the plan had been tried—to use double ended armatures and to couple the two armature windings in series to give a slow speed and then in parallel to give about double the speed. A combination of that kind along with the unequal three-wire voltage, or even an equal three wire voltage system, would give large ranges of speed. He had in operation, in the Kelvinside Electricity Works, a motor made in London, by Mr Hollick, with an arrangement which was rather ingenious. At the end of the armature was a dummy core, constructed of laminated iron discs, just in the same way as an armature core proper. When the speed required varying, the whole of the field magnets were slid, by a simple screw gear and guides, longitudinally off the armature winding and over the dummy core. He had never been quite clear as to whether there was any real difference in the effect on the armature, as regarded sparking, between this method of altering the speed and the ordinary method of varying the strength of the field by manipulating the exciting current. He would be very glad if Mr Sayers would say something on this point in his reply.

Mr Wilfrid L. Spence (Member) regretted that he did not have the advantage of hearing Mr Sayers read his paper, but he had perused with great interest the copy Mr Sayers had been good enough to send him. He cordially endorsed the author's statement that "The familiar ordinary step cone pulley is really a very unsatisfactory device for the purpose," but at once joined issue over the illustration which was set forward as the "awful example." Certainly the ratios given appeared to be without system, but looked at in another way it would be seen that 22 per cent. added to 73·5, the first speed, gave 90; and 22 per cent. added to 90 gave 110; while 22 per cent. added to 110 gave 134; so that within its narrow limits, of 4 steps and an overall variation of less than 2 to 1, the range was practically perfect. He emphasized this point because he was strongly of opinion that the geometrical as opposed to the arithmetical range was the true one

for the purpose of machine tool operation. The author evidently favoured the arithmetical range, and of course that was right in the limiting case where the number of steps was infinite—where there were no defined steps at all but a continuous variation; but for most practical purposes he thought properly stepped speeds were satisfactory, and that no one would take serious exception to running at 90 revolutions if 85, considered the best possible speed, were unattainable—the difference being only 6 per cent. His own objection to cone pulleys was that, with them, it was absolutely impossible to combine:—

(*a*). Really great pulling power.
(*b*). A wide overall range of speed variation.
(*c*). Numerous steps in a true geometrical range, with
(*d*). Real ease of manipulation.

And looking out for something better he had been led to devise the multiple voltage system which had been installed throughout the works of his Company at Alloa. He had in daily use there some 70 to 80 motors—every machine being independently driven, and, broadly speaking, they had abolished both main and counter shafts, as well as belts and cone pulleys, with the result that the output of individual machines was greatly increased, and this, he thought, was the outstanding feature of electric driving. The undoubtedly large coal and steam economies, while of great importance in many cases and always worth striving for, were quite overshadowed in others by increased output, due to the use of individual motors. For example, he had a couple of Herbert's hollow spindle hexagon turret lathes with which, as members would know, blue prints were issued to show the best speeds for stated reductions on bars of various diameters. Belt driven under workshop conditions—the lathes being flooded with lard oil—the schedule speeds were probably as high as were practicable. At Alloa, with powerful motors directly geared, not belted, to the head stocks, it had been found quite practicable to run at three times the speeds referred to. With belts, such results would be utterly impossible owing to slip. In the same connection—increased output—he

Mr Wilfrid L. Spence.

referred to the Ward-Leonard system of speed control, described at some length by the author. This American method, in addition to the disadvantages named in the paper, was, in respect of power consumption, far and away the most inefficient system of electrically driving newspaper machines on the British market at the present time; but it undoubtedly gave a very perfect range of speeds, and was probably quite satisfactory from the press operators point of view. He was particularly interested in this application of motors to newspaper web printing machines as patentee of the reducer system plant used on two machines at the *Glasgow Herald* and *Evening Times* offices, where the experience as regards output had been most instructive. Of otherwise similar machines, one belted and the other motor driven, and both printing the same edition, it was found that the electric press would regularly turn out 50 per cent. more papers than the belted press, and on occasion the increase had been 80 per cent. The cost for current only amounted, at 1½d per unit, to about 1d per thousand for eight page papers. This newspaper printing machine equipment was particularly interesting on account of the extreme range of speeds required. At starting the speed must be quite uniform at six or eight revolutions per minute, and after the preliminary operations the acceleration must be equally uniform until the maximum speed of 200 revolutions was reached. The method involved the use of a pressure reducing transformer, running only during the slow speed period of from 6 revolutions up to about 30 revolutions per minute; between 30 revolutions and about 160 revolutions the speeds were only transitional, they were not regarded as working speeds, and were quickly passed over so that pure resistance regulation was admissible, the next 20 revolutions were also controlled by resistance which would carry the full current continuously. At 180 revolutions, which might be considered as normal speed, the motor worked direct on the supply without any resistances, and for the remaining speeds up to 200 revolutions the field was slightly weakened. The net result was that the dead slow speed period, which might be prolonged, was obtained with

good economy by the reducer, the transitional speed period of acceleration, lasting only a matter of seconds, involved resistance losses, and the normal working speeds extending over many hours were obtained with the highest possible economy. Results such as those previously given, for operations differing so widely as turning steel and printing and folding paper, showed conclusively that there was far more in motor driving intelligently applied than most people thought. But the man who merely replaced an engine by a motor and retained all the old arrangements of shafts and belts was doomed to disappointment if he looked for either increased output or material economy. The multiple voltage system of speed control was briefly referred to in the paper, and as he was probably the only exponent of the system on a large scale in Europe, the members might be interested to know something of the arrangement. The power house equipment was quite simple, although electricity was supplied in bulk on a three-wire system for lighting and power throughout the burgh. The generators were single commutator machines developing 460 volts continuous current, and being equipped with three-phase rings also gave off alternating current at nearly 300 volts. The neutral wire was supplied from the middle point of a three-phase star-connected static transformer connected to the generator slip rings. This accounted for three wires of the five which ran through the shops. The intermediate wires were supplied at a pressure of 190 volts, so that on each side of the neutral there were available pressures of 95 volts and 230 volts, and by selecting and combining, the following pressures were available: 95, 135, 190, 230, 325, and 460 volts These with a single additional weak field step used between some of the voltage steps gave a total speed range of about from 7 to 1 in 11 steps, and each was just about 22 per cent. higher than the preceding.

Correspondence.

Mr Henry Lea (Birmingham) fully appreciated the interest of the subject of Mr Sayers' paper, and in particular the excellence of the method of speed regulation by means of varying the

Mr Henry Lea.

strength of the magnetic field. In 1897, he put into the General Hospital in Birmingham 8 D.C. electric motors at 110 volts for driving the ventilating fans. The following table gave the particulars of the motors. The maximum B.H.P. was of course obtained at the maximum R.P.M.

TABLE I.

Shunt Wound Motors.

Number required.	Maximum B.H.P.	Maximum input.	Maximum amperes.	Maximum and minimum revolutions per minute
1	7½	6750	62·5	900/600
3	6	5400	49·0	do.
4	5	4500	41·0	do.

The efficiencies guaranteed by the contractors were given in the following table:—

TABLE II.

Size of Motor, B.H.P.	Commercial efficiency at maximum power and speed.	Commercial efficiency at minimum speed and half power.
7·5	86% @ 900 revs.	77% @ 600 revs.
6·0	84% @ 900 ,,	74% @ 600 ,,
5·0	83% @ 900 ,,	73% @ 600 ,,

These efficiencies were $\frac{\text{B.H.P.}}{\text{E.H.P. input}}$.

The prices of these motors were as follows:—

7½ B.H.P.,	- -	£70
6 ,,	- -	£68
5 ,,	- -	£61

These prices included testing each motor under full load for

twelve hours at the makers' works, and also included carriage, delivery, fixing, connecting up to the cables to be brought by another contractor within the motor rooms, setting to work, and running for one week under the charge of a competent attendant. Also maintaining the motors for a period of twelve months, as far as remedying all defects, if any, in design or materials or workmanship. One of the conditions of the specification was that the motors would have to run continuously day and night without any stoppages excepting for repairs. Since that time these motors had been in continuous use day and night with the most satisfactory results. The only repairs had been turning up the commutators, and that very seldom, and renewing the brushes, which were made of copper gauze. There had been no trouble with sparking at the brushes. There were 10 contacts in each shunt resistance, so that 10 different speeds could be obtained, commencing with 900 R.P.M. and ending with 600 R.P.M. About two years ago the Electric Supply Department raised the pressure of their supply, and rewound the motors, but they had worked just as well since the rewinding as they did before. These motors had given the greatest possible satisfaction, and he could not conceive of a better method of speed regulation for the purposes of this particular case.

Mr W. GEIPEL (London) observed that the subject of Mr Sayers' paper was one well worthy of the time and trouble which the author appeared to have devoted to it, having regard to the rapid extension of the use of motors for industrial purposes. He had noted with particular interest what Mr Sayers had stated regarding the "Ward-Leonard" system, and quite agreed with him that for ordinary purposes of speed control the "Ward-Leonard" system was expensive in first cost; but for those purposes where it was necessary to control large motors for long runs at speeds less than full speed (as in the case of heavy printing machines, for example), the first cost of the "Ward-Leonard" system, notwithstanding the motor generator required, was not very different from that of the other systems at present generally in use. It should be remembered

Mr W. Geipel.
that when it was necessary to run frequently for very long periods at less than full speed, if the series resistance system were adopted, it must be very large, otherwise it would, of course, become too hot. Further, when Mr Sayers stated that the motor generator would reduce the efficiency of the main motor, it must be remembered that when running below full speed it might be that the loss in the motor generator would be less than the losses in the series resistance. For example, at Messrs Lloyd's, where he had ascertained by recent experiments taken during the night's run of the printing press, that the general speed was 80 per cent. of full speed, the efficiency of the "Ward-Leonard" system worked out at 84·2 per cent., whereas with the series control the efficiency would, of course, be only 80 per cent. It was obvious that, as the slower speeds were approached, so the loss by the rheostat control increased, and that the difference in the efficiency between that and the "Ward-Leonard" system became more and more in favour of the latter. Then, apart from the question of efficiency, there was the wear and tear, which, in the case of rheostats for controlling large currents, was somewhat excessive. Again, the contacts in the case of these large currents must necessarily be limited to a small number, so that in passing from one to the other there was a considerable jump in the speed, whereas in the "Ward-Leonard" system the speed passed up the whole scale gradually, from nothing up to full. These were points which should be borne in mind in discussing the question of speed reducing gear, more especially when applied to large motors. With regard to the regulating of shunt wound motors by reducing the strength of the field, he was of opinion that, while this might be applicable for very small ranges, yet where large ranges were required it was quite impracticable, as Mr Sayers had shown. With regard to Mr Sayers' suggestion that the strength of the fields might be varied by altering the connection of the field coils from series to parallel, he would point out that there was the difficulty and risk of switching field coils when excited, owing to the effects of induction. Did he not himself anticipate such a difficulty?

Mr SAYERS, in reply, said Mr Mavor seemed to ignore his statement that the speed limit imposed at the commutator depended upon whether commutation was effected by the resistance of carbon brushes or by induction. Mr Mavor had put on the board a formula giving the flux density as one factor in reactance voltage. The truth was that if carbon brushes were to be depended on for commutation the factor to deal with was not a flux density but the capacity for flux density. He would try and make clear what he meant by an example. In a steam engine, with a cylinder of certain size, the size might be stated in terms of the quantity of steam at a given pressure, etc., which it would contain, but the actual size of the cylinder was a thing which was independent of the steam altogether. In the same way the reactance voltage in a motor was a thing which was independent of the magnetism, but was dependent upon the dimensions of the magnetic circuits. Reactance voltage was independent of the degree of excitation of the magnets. Mr Mavor spoke of the use of very high speeds. In the paper he contemplated the possibility of using much higher speeds than those which he had mentioned as being standard and reliable speeds. It was a very interesting question, how much these speeds might be exceeded, and it was a matter for experiment to determine. What had just occurred to him was this, that there was no physical reason why the size and cost of electric motors should not dwindle down to quite a small fraction of their present size and cost, just in the same way as steam turbines had reduced the size of steam motors for a given power. If the future showed that it was practicable for ordinary purposes to run electric motors up to anything like the speeds which were customary for steam turbines, such speeds as Parsons used, for instance, namely, from 5,000 to 10,000 revolutions per minute, then the price might go down very considerably. It would come to be a question of the practicability of producing reducing gear at a sufficiently low cost. Dr. Maclean said that he (Mr Sayers) had dismissed the series resistance regulation rather too abruptly. Perhaps he had. One inevitably fell into using it because it

Mr Sayers.

was the obvious and simple way of reducing speed for ordinary purposes, but one felt that in a scheme with a large number of motors, series resistance regulation was a thing to get rid of. As Mr Spence remarked, and as he had pointed out in the paper, it was not only that all the unused power was wasted when the speed was reduced by series resistance, but in addition to that the capacity of the motor to maintain a constant speed against whatever load was imposed upon it was ruined. If a shunt motor was a good one and of fairly high efficiency, it would tear itself to death rather than have its speed seriously reduced. If, on the other hand, the speed of a shunt motor was considerably reduced by means of a rheostat, and it was doing a heavy load, if the load went off the motor would run away; if the load increased the speed would fall—speed regulation was gone, because, as he mentioned in the paper, the amount of pressure taken off the motor by the rheostat was equal to the product of the current which the motor took multiplied into the resistance. The current changed with the load, and one factor in the quantity referred to changed, consequently a change of pressure occurred on the motor brushes with a resultant change of speed. Mr T. B. Murray spoke of the necessity for a large air-gap to get stability. It was quite true that there must be a moderate air-gap, but one firm, Messrs P. R. Jackson, with whom he had been in communication on the subject, had stated that they had some difficulty with regard to the question of stability, and that in consequence they could not vary speed beyond a certain point. He put that to one or two others, and they did not seem to have found any trouble. The Ward-Leonard system was one which would encounter that difficulty immediately if it existed to any serious extent, but it did not seem to affect that system, so that he did not think there was much need for ordinary purposes to increase the air-gap. Mr Murray also referred to the series-parallel system which had been referred to by Mr Chamen and Mr Spence. He had purposely ommitted the series-parallel system. He had drafted out a number of combinations but it did not seem

really to come under the subject of his paper. Any number of combinations, or rather steps, could be got by multiplying either windings of the armature or the voltages of supply, but the object of his paper was to try and impress the importance of the ability to vary speed gradually, not in steps. That was his answer to Mr Spence with regard to the cone pulley steps. By smooth gradation he did not mean a regular succession of steps at 22 per cent: he meant a slope and not steps at all. He wanted to have a machine in which, by merely turning a handle, he could gradually increase the speed. In the case cited in the paper, he assumed that the conditions were that the machine could not be run at 90 revolutions, but could be run at 85, also that the best job possible would be got at 85 revolutions, but owing to the arrangement of step cones, the work had to be done at 73 revolutions, which meant running at a speed 15 per cent. lower than was desired. If this matter was thought out, it would be seen that the logical deduction was that in every shop where gradual speed regulation was not provided—and this meant at the present moment nearly all shops—every machine was running slower than it should. Stated briefly, no man would run a machine too fast. With step speed changes, or when the machine was driven at a constant speed, the exact best speed would only be hit as an exception now and again; therefore, it would be a general rule that machines would be run too slow. Hence variable speed on each machine might be expected to increase the output from 10 to 15 per cent. at least. He thought Mr Chamen recognised since speaking, that in the paper he had dealt with the methods of varying speed referred to under the heading "multiple voltage systems." He did not go into it in great detail, but a reference to it would be found on page 230. With regard to Mr Hollick's method of varying speed, Mr Chamen asked whether such a method would have any effect on the commutation with respect to sparking. The reply was that it would depend upon the question already dealt with, namely, whether commutation was inductive or due to the use of carbon brushes. If the commutation was inductive

Mr Sayers.
then the motor would be more liable to spark at a high speed or with the magnets shifted away from the armature, than at lower speeds with the armature more nearly symmetrically disposed in the fields. On the other hand, if the commutation were due to the resistance of carbon brushes purely and simply, the sparking would be entirely independent of the relative positions of the fields and the armature. He would like to put a question to Mr Spence who spoke of the advantage of his system as compared with the Ward-Leonard system. So far as he remembered, when Mr Spence got away from the use of his small barring motor he used rheostat control. Was that so?

Mr SPENCE—Rheostatic control was used only on the transitional speeds, the working speeds both low and high were obtained with the best economy. He found in practice that printing machines were rarely run at their full speed of 200 revolutions per minute, hence it was the practice to arrange the gear so that the motor was running on the full voltage and with normal field, with the press doing 180 revolutions per minute, higher speeds than that were obtained by weakening the field.

Mr SAYERS, in reply to the correspondence, observed that Mr Henry Lea's contribution was interesting as giving a record, not of experimental results, but of what had been done and what had been at work for some years. Mr Geipel spoke of the wear and tear of the rheostats as being great compared with that of the transformer, but he did not know that he could agree with him. A rheostat was a large and cumbersome thing and had the objection already referred to, but he did not find any great amount of wear and tear in the rheostat, and he certainly thought that, considering the great cost comparatively of the Ward-Leonard motor generator, the wear and tear would be a larger item with that system than with a rheostat. Another point of Mr Geipel's was that he could not change the connections of the field in a motor in order to reduce the speed. He did not propose to do that, and merely mentioned the possibility of doing so. He never thought of changing the connections while the motor was running.

Mr Geipel mentioned the fact that where Messrs Lloyd used the Ward-Leonard system, the motor was run for a very large proportion of its time at 80 per cent. of the speed, which agreed with what Mr Spence had said. He would just like to emphasize the main point of this question, and it was this, the possibility which field regulation provided of getting what he had referred to, namely, the exact speed that was wanted. He thought that what it would probably come to was the use of some mechanical gear or multiple gear, such as cone pulleys or—in a large scheme—a multiple voltage system to give speed steps, and that one or other of these arrangements would be combined with field regulation to give all the intermediate speeds, so that whatever job might be in any machine, the best possible speed could be attained on the spot by practical test and adjustment, by operator, foreman, or manager, without loss of time.

Mr Sayers thanked the Institution for the kindness with which the paper had been received.

On the motion of the Chairman, Mr Thomas Kennedy (Vice-President), Mr Sayers was accorded a vote of thanks for his excellent paper.

TOOLS AND GAUGES IN THE MODERN SHOP.

By Mr H. F. L. Orcutt.

(SEE PLATES X., XI., XII.)

Read 24th March, 1903.

As a rule, one of the most pleasant tasks of engineering management, except perhaps to those who are directly responsible for dividends, is purchasing new outfit. A shop, however, may be a perfect paradise of up-to-date equipment and still be uneconomical, unsatisfactory, and profitless. It must be arranged in proper working condition or the full benefit of investment in plant will not be secured. This means hard work, worry and many disappointments. I have thought best to try to lay before you those features of management and organization, without which the finest outfit will be of little value, rather than attempt to elaborate ideal sets of tools and gauges which the modern shop should possess.

Again, it is not the intention to deal with the question of tool and gauge equipment as applied only to highly specialized manufacturing where big quantities are turned out with the aid of expensive special jigs and fixtures, but rather to attempt to bring before the Institution the importance and the usefulness of tool and gauge outfit in general engineering work where it is desirable to turn out good work cheaply. In the course of my regular business, again and again have I been obliged to explain that the extensive use of modern tools and gauges wanting in many of our shops has little to do with repetition work, nor work of extreme accuracy. Every manufacturer who has had the experience of renovating, re-equipping, and re-organising his shops, will admit that in carrying out this work he has been led to invest in ordinary tools and gauges far in excess of that which was his wildest dream in the days of the old equipment. It is common to talk about "labour saving" machines.

How little we hear about "labour saving" tools and gauges. Yet the "labour saving" machine is useless without them. As a rule, those machines which possess labour saving qualities in the highest degree are fitted with the most elaborate sets of tools. They are often installed in shops where there is little facility for renewal and repair of these tools for keeping them in order. Very often the reason for this is that management and organization in accordance with the *old* methods of manufacturing are adhered to, while new machines and tools have been adopted in accordance with *new* methods.

Undoubtedly, the so-called "new" methods have come to stay. Unquestionably there is not a sufficient appreciation of the *relative* importance of the tool and gauge equipment in the modern shop as compared with the machine equipment. I shall first briefly mention those features which distinguish the "old" from the "new," then, to more clearly demonstrate this difference, illustrate and describe sets of tools representing the ancient and the modern, and finally deal with features of shop management and organization which are necessary to the successful introduction and maintenance of the "new" methods. Very often, where new plant has been put in, indifferent results only are attained, largely for the reason that there is not a thorough understanding on the part of both masters and men of the vast difference between the tool and gauge equipment in the "old" and the "modern" shop.

In the outfit of tools and gauges more than in that of the machines themselves, is to be found that which distinguishes the "new" system from the "old," the modern shop from the out-of-date establishment.

Under the old system work was done on comparatively simple machines, the tools being made and kept in repair with practically no other appliances than the forge, the anvil, and the grindstone. The quality of the product was dependent on the skill of the man operating the machine. He was directly responsible for accuracy and efficiency. He served a long apprenticeship, ground and set his own tools, knew how good or how bad "fits" to make, was

his own inspector, kept his own "tool stores" and knew nothing of factory administration or organization. Contrast him with the operator of the modern labour saving machine. The latter is asked to take no responsibility for accuracy. He has served no apprenticeship, and in a few weeks is a machine operator. He rarely grinds his own tools nor does he set them. He rarely sees the part he produces "fit" into any other part. His work is "passed" by an inspector; he gets his tools from the stores; he is part of an "organization" much the same as the machine he attends. Under the old system results depend mainly on the skill of the man; under the new, on the design, and the setting and condition of the "tools." In the one case, the highest skill and intelligence is employed in doing the work itself, in the other, it is devoted to the designing, making, and keeping in a state of efficiency the tools; the machines operated by comparatively unskilled labour turning out work cheaper and in many cases better than the highly skilled man under the old system. Shortly, tools and gauges take the place of the craftsman. In a certain sense this may be regrettable, but it is inevitable with the enormous demands that are being made on the engineer to produce more and more by machinery, by which nearly every article of necessity and luxury is cheapened. There is no other way but to make the tools take the place of the man, as far as this is possible, otherwise the combination of high grade and low costs will not be attained, interchangeability and uniformity will be impossible, and there cannot be an extensive use of labour saving machines.

To more clearly bring before you the difference between the old and new tool and gauge outfit, a series of illustrations are shown, contrasting the tools used in ordinary practice under the two methods.

The first series of illustrations will be of a set of tools, necessary to make an ordinary stud, Fig. 1.:—

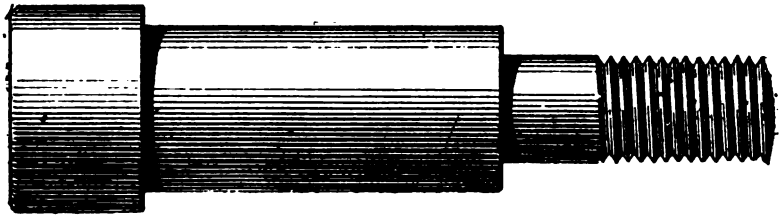

Fig. 1.

(1) The set of tools used on the ordinary engine lathe, Fig. 2.
(2) Set used on the semi-auto. turret machine, Fig. 3.
(3) Set used on fully-auto. screw machine, Fig. 4.

(See also Plate XII.)

The set of tools shown in Fig. 2 would be those used in the ordinary engine lathe. Of course, the workman in this case must be a trained man, having served an apprenticeship long enough to enable him to set the tools and manipulate the lathe with skill and rapidity. It is evident that cost and accuracy in this case are dependent mainly on the workman himself.

The 2nd series shown, Fig. 3, would be the tools and gauges used in the turret lathe. As is well known, this machine is usually partly automatic; tools and stops by which dimensions are regulated are usually set by the tool maker, so that for accuracy the workman is not very much relied upon. He simply manipulates the machine, and tests the parts from time to time with the gauge also fixed by the tool maker. Costs in this case are dependent somewhat upon the ability of the workman.

In outfit No. 3, Fig. 4, the tools shown are made use of in the fully automatic type of machine. In place of one skilled man operating a single machine as with tools in Fig 2, there is one unskilled* man operating from six to ten machines—a man who is without any special training or ability, and knows little of accuracy or economy. Tools have wholly supplanted the skilled machine-man, and the tool outfits shown are familiar to all. They are

* The word "unskilled" is used in the sense of not having served an apprenticeship or undergone a long period of training.

not brought forward, of course, with any claim to originality, but with the claim that, in most shops where similar tools are in use, there is not sufficient attention given to the management, administration and organization, which are necessary to economic results. This will be dealt with in detail after calling attention to Figs. 5 and 6.

Fig. 5 represents a set of boring tools such as are in common use in engineering shops, and which are sure to be largely superseded by the set shown in contrast, Fig. 6. In the one case boring is done by the necessarily more or less skilled worker. Interchangeability, uniformity, cheapness and accuracy are difficult. In the other case all the above results are easily attained with unskilled operators, with little regard to quantities.

Fig. 7 shows a gang of milling cutters with arbor for milling the bottom surfaces of a lathe carriage slide, and can be contrasted with a set of tools similar to those in Fig. 2 in case the work might be done on a planing machine.

With these illustrations before one, conclusions are not difficult. It is evident that with the simpler set of tools, as in Figs. 2 and 5, desired results are mainly dependent on the skill of the machine man. That with the more complicated sets of tools results are dependent more on the tools, while the operator can be unskilled. That a shop organization and management which answered in the one case is inadequate in the other. That a shop that has adopted the newer systems, even to a comparativly small extent, cannot expect satisfactory results from the new equipment, and cannot make extensive improvements along modern lines, unless the management is changed to suit the new conditions. This last statement is applicable to not a few shops; the consequence is, it is not uncommon to manufacturers who have put in new equipment and who still have little faith in the value of so-called up-to-date equipment, and who quite consistently hesitate to make further investments, to do that which they eventually cannot avoid, that is, scrap a considerable portion of their plant.

To give a practical illustration of the relative value of tool and

gauge equipment to machinery plant, I asked a manufacturer representing what might be termed an extreme case, to give figures, and he very kindly sent some interesting data.

I refer to the highly specialized plant of Mr Hans Renold, of Manchester, which is devoted to making driving chains and wheels. In this plant the relative value of the tool and gauge outfit is very high, and Mr Renold states that the tendency is to increase still more in this part of his outfit:—

7 draughtsmen employed on tool work.
4 on chain and wheel work.
222 machinemen on chain and wheel work.
54 men on tool staff.
Productive machines constitute 54·26 per cent. of equipment.
Cutting tools, gauges, and appliances, constitute 24·66 per cent. of equipment.
Value of tool and gauge plant to machine plant, 1 to 2.

Many manufacturers do not realize:—

1st. That they are working in a new era in respect to methods and equipment.
2nd. That the accurate tool and gauge largely takes the place of the skilled workman.
3rd. The relative value of tool and gauge equipment as compared to machine equipment.
4th. The radical difference between the old and the new equipment.
5th. The radical changes necessary in shop management on account of this difference.

An attempt has been made to illustrate how methods have changed, and to contrast the old with the new systems. It remains to consider the shop supervision that is best adapted to the changed conditions. Different shops, of course, demand different treatment. In every shop will be found special features well developed, in all shops something will be wanting. It is believed, however, that in all cases it will be found useful to carefully consider the following items, and that they are all important

to the successful introduction and development of improved equipment. To put them in practical useful form, they are given first as a list, then followed by brief comments.

1. General organization and administration.
2. Training of men.
3. Auxiliary equipment.
4. Fixing limits of accuracy.
5. Increased use of accurate gauges.
6. Standardizing sizes.
7. Improved facilities for storing and distributing tools and gauges.
8. Inspection system.
9. Rewarding labour.
10. Better shops.

It will be impossible to make the remarks that follow them anything but suggestive. Each heading could be made the subject of a paper itself.

General Organization and Administration.

The use of tools, by which good work is produced by comparatively unskilled men, necessitates the adoption of machines especially adapted to these tools, in place of the "all around" machines in which simple tools are used. Under the new system there are special types of machines in which the more complicated tools are used. Labour is necessarily subdivided and operators are specialized. A better illustration cannot be found than in the lathe itself. Although still a most important machine, it is gradually being robbed of its glory. It has for years, and does still perform the work of a chucking machine, a turning machine, a bolt cutter, a turret machine, a grinding machine, and, worst of all, a polishing machine. In the modern shop note how a large part of this work is subdivided. Chucking is done in a turret machine suited to the set of tools shown in Fig. 6. Stud and bolt work is done in the turret lathe; threading, on the bolt cutter; finishing, on the grinder; polishing, in the polishing room.

Plainly, a shop in which chucking, turning, threading, bolt and stud work, grinding and polishing are all done on one type of machine, calls for an organization quite different to that which is best where each of these operations is performed on machines of a distinct and separate design. It is now common to find in shops a "Turret Machine Department." This is but one example of specializing and reorganizing. The same principles must be extended to chucking, milling, grinding, planing, etc. Separation into departments necessitates new systems of cost keeping and general management. Curiously enough that which is most important of all often receives the least attention on the part of those who are re-equipping, that is the "tool room." This will be dealt with in another part of the paper.

Training of Men.

There seems to be a vague notion amongst engineers that some sort of an apprenticeship system is still called for. In the majority of shops, the spirit with which it is maintained, however, and the regulations by which it is governed may be fairly termed mediæval. Why train a man seven years to do that which a workman, aided by a modern set of tools in the proper machine, can learn to accomplish in two months. The six months apprentice in a modern chucking department, can turn out work in many cases quicker and better than the five years journeyman in the lathe department. This is not saying that it is not desirable to teach men to turn and bore accurately, the point is, *too much time* is spent in learning accurate hand work and too little time in instructing in the use, the application, and the care, of the labour saving tools. The modern apprentice system must be arranged with due regard to the labour saving qualities of the latest types of machines, tools, and gauges. As it is now commonly carried out, the apprentice is kept for months on work which is the merest routine. In other cases he has little or no practice or knowledge of the most important mechanical operations. That which is most neglected

is in giving instructions and opportunity to learn the details of the tools and special appliances which make it possible to produce accurate work with the unskilled machine attendant. It has been stated that the distinguishing feature of the modern shop is its elaborate tool and gauge equipment. In how many shops, even when "modernizing" is fairly well developed, would it be found that particular attention is given to the training of men in the designing, the repairing, the renewal, the setting, and use of tools. Yet without the intelligent "tool maker" the modern plant is useless, with indifferent tool making it is uneconomical; and only with the highest skill in tool making can it attain its highest state of efficiency.

To my mind the apprentice question is of the first importance to the success of our engineering progress and to the individual shop. It is little wonder that desirable youths are not attracted to spend six or seven years in shops where the equipment is but partially modern and the system of instruction antiquated. Add to this dirt and uncomfortableness, and how can one expect them to be anything but the resort of the necessitous or the occasional enthusiast.

Auxiliary Equipment.

The idea that it is necessary to systemize and specialize in the matter of auxiliary equipment is slowly but surely gaining ground. But very few engineers have, however, in the modern sense, thoroughly equipped and organized tool rooms; many have nothing whatever. A great many have made a start without thoroughly grasping its significance, nor understanding that practically it is an indispensable aid to the successful operation of a modern plant and of invaluable assistance in the introduction and development of new methods.

Tool room outfit is often undertaken as a necessity, equipped in a niggardly fashion not in proportion to the sums spent in costly machines and tools. That which is the foundation of a modern plant is looked upon, one might say, as the gilding of the weather-

cock. That which should be first installed is the last to be considered.

The reason for this is, that the manufacturing problems themselves are not understood, particularly those which relate to the modern tool and gauge equipment.

Under the old system the forge and the anvil and the grindstone were sufficient. Consequently we repeatedly find, even in shops well advanced on the new lines, the forge, the anvil, the hammer and the emery grinder forming the nucleus of the tool room outfit. The forging of tools has as little connection with the modern tool room as the forging of machine parts has to do with the lathe or the milling machine department. That one so often finds the two extremes of dirt and refinement forming the basis of a tool room equipment is the best of evidence that matters are in a state of transition. This is hopeful, but not enough. In these shops large enough to support a tool room as a special department we should find :—

1. None but the most accurate machine tools and gauges.
2. Workmen of the highest skill and intelligence.
3. An entirely independent and specialized department.
4. Avoiding as far as possible making it a "manufacturing" department.
5. In large engineering works where it is the intention to thoroughly modernize, the tool room should be the first equipment to be installed, not the last.
6. No connection with smith shop work.
7. Not necessarily in any way connected with "tool stores."

Fixing Limits of Accuracy.

It has been shown that with the more extensive use of modern tools accurate work is largely transferred from the skilled to the unskilled workman. Under this condition it is important that the gauge equipment should receive special attention. In shops working on the old lines, it may be said that an exact knowledge of dimensions does not exist, not even with the man who makes the

"fits." With the advent of the new system it becomes a necessity to ascertain exactly the dimensions suitable for different classes of work, otherwise the extensive use of gauges is not possible, particularly that most useful form known as the "limit" gauge. Again, it is obviously out of the question to expect an unskilled machine attendant to have the knowledge necessary to decide as to the quality of work. It must be decided for him as far as can be, with as little as possible left to his judgment. It may seem a formidable undertaking in a large engineering establishment to fix the limits of accuracy for the different classes of work, to record how much "play" should be allowed in different sizes of bearings, etc. It is not a matter of very great difficulty if undertaken systematically and advantage is taken of data already compiled. It will repay the effort, for without it cheapness, combined with good quality, interchangeability, and uniformity are practically impossible.

Increased Use of Accurate Gauges.

It is really marvellous what the skilled man can accomplish on inferior machines without measuring instruments of precision. This is usually unappreciated, except in shops having the best gauge equipment. There are surprises in store for those who have given little attention to this matter, not only surprises as to the inferior, but in many cases as to the superior work done by their best workmen.

It will be found that a considerable amount of work is regularly turned out within limits of a few ten-thousandths of an inch. This can be done without accurate gauges, but it cannot be done easily and uniformly, and at the same time economically, unaided by a good gauge equipment, whether skilled or unskilled workmen are employed. The more extensively unskilled labour is made use of, the greater the necessity for an accurate and complete gauge outfit. Take, for instance, the manufacture of small arms, where nearly every machine operation is performed by unskilled men. There the gauge outfit is found to be the most elaborate, and although much of the work

itself is of no special accuracy, the gauges are of the finest, many with no "limits." Experience has demonstrated that this is the cheapest method of measuring. The lesson of the gun makers' gauge has been before engineers for years. It is curious that it has not been made more use of in general engineering. The reason is that it is looked upon as a "repetition" job, and that repetition does not occur in the ordinary engineering shop sufficiently to warrant a proper gauge outfit. This is a mistake. Let any maker of, say, steam engines count up the number of 2-inch holes and 2-inch shafts that he has made during a period of twelve months, and he will find repetition enough to warrant a gauge outfit for this size. The same with other dimensions. The conclusions are—That gauges of really fine limits are most economical; that as unskilled workmen are more and more employed, it is advisable to increase the accuracy and elaborations of the gauge outfit; that as individual fitting is done away with, the gauge must be more and more relied upon; that limits of tolerance are really finer than they are ordinarily supposed to be; and that where fairly good work is done the accurate gauge is cheaper in the long run than the inaccurate.

Standardizing Sizes.

An increased investment in accurate tools and gauges seems inevitable for all who would work on progressive lines. It becomes important, then, to consider how this investment can be kept down as much as possible. Herein lies an opportunity that should not be missed for the machinist to point to the shortcomings of the drawing office and the designer. Undoubtedly shop progress is very much retarded by what might be termed a "class distinction" that frequently exists between the drawing office and the works, and which prevents a free interchange of ideas and experience. Designing is wanting in an important element if it is not carried out with due consideration to making. This cannot be done, of course, if the designer and draughtsman are ignorant of approved shop methods. It is to be

regretted, however, that this is frequently the case. With reference to this particular point, the tool and gauge outfit is of much more importance than the machine equipment. This is easily explained.

Under what we have often termed the "old" system of machining, the designer was called upon to give but little attention to the tool outfit, as in a modern sense it did not exist. With no grinding, little turret lathe or milling work, with no aim at uniformity or interchangeability, little but the simply forged tools were used and very few gauges. A shaft of certain length might have as many different dimensions as pleased the fancy of the draughtsman, the same turning tool, the same boring tool, and the same calipers, dealt with all the sizes. With the use of elaborate sets of chucking tools, sets of limit gauges, complicated and expensive turret machine tools, all this is changed. Shafts, studs, bolts, screws, holes, angular cuts, must all be kept within certain bounds or the tool and gauge outfit will either be greatly increased or what is more likely—not be made the most economical use of. Again, under old conditions where the more simple and older tool outfit was in use, the relative cost of awkward complicated cuts was not so great. It is with the straightforward uniform work that the best results are possible under the newer methods of tooling and gauging.

To reduce investment in the modern tool and gauge outfit to the smallest amount, and to get the best return from this investment:

1. Work must be designed to be as straightforward as possible.
2. The variety of dimensions be kept as small as possible.
3. There must be constant intercourse between the drawing office and the works.
4. Parts must be standardized as far as possible.

Improved Facilities for Storing and Distributing Tools and Gauges.

It is by no means an uncommon experience in shops where a

system of storing tools has been introduced, to find literally tons of useless steel in the form of unnecessary tools of the ordinary lathe and planer type. This means that hundreds and even thousands of pounds of money is idle, or what is more likely, absolutely wasted, simply for the want of a little system. The proper storing of tools, even in an old-fashioned shop, is an economy, in the up-to-date shop it is a necessity, or the investment in outfit will be excessive. Tool stores, aside from the fact that they are of great assistance in keeping the outfit at a minimum, have other advantages that are so obvious that they merely need to be mentioned.

Firstly. On account of fine cutting edges and complicated design, it is impracticable except in well-arranged stores to provide facilities (and know that they will be used) by which they can be kept in good condition. An adjustable reamer with fine sharp cutting blades surely calls for more consideration than a flat drill.

Secondly. On account of their great individual value it is desirable to check them out to the men, and to keep them under the control of the management.

Thirdly. If they are constantly under the control of the management it is easier to keep them in an efficient condition; this is best for all concerned.

Fourthly. Under a "stores" system, tools are quickly found and much time is saved.

Last, but not least, central stores are a great aid to good shop management, of which "order" is the foundation.

Inspection System.

Naturally the untrained machine operator cannot be expected to possess the judgment necessary to decide as to quality. It must be decided for him. Usually this can be accomplished by a system of inspection. It is astonishing how many engineers who have put in new plant which is operated by unskilled men have made comparatively little provision for a thorough system of inspection,

without which they cannot get the full benefit of improvements. The effort is constantly made to get rid of the high-waged skilful workman. Let us be thankful that he is not so easily dispensed with, and that he can never be eliminated. Unless quality is to be sacrificed, either he or an equivalent must be made of use in every engineering establishment. That equivalent must be either a system or an appliance, or both. If quality is to be kept up, the system of inspection is the best means of controlling the failings of tools and appliances, and the lack of knowledge of the machine attendant. It is an indispensable factor in a labour-saving plant. It is probably not more extensively carried out for the reason that shop managers do not always appreciate what has already been repeated, that tools and gauges are now taking the place of the skilful machine man who was thoroughly capable of being his own inspector.

In any shop, old or new, a thorough system of inspection has advantages. It is made up of three essentials :—

1. Inspection of individual parts, both in process and finished.
2. Inspection of the assembled machine.
3. Inspection as to efficient working of the machine.

Carried out on these lines it throws responsibility for bad work on to the right department, or individual. It keeps work within prescribed limits. It assists to maintain a uniformity of product. It makes it possible to adopt, to the fullest extent, labour saving tools and machines and systems of gauging without fear of deteriorating quality. It is of great assistance in making improvements, provided data—which furnishes the basis of critical study—is recorded and made use of.

Rewarding Labour.

This question is a large one; it is important, and rapidly coming to the front. It can be but barely touched on in passing, as it especially relates to tool and gauge equipment. Generally speak-

ing, it may be said that progress has been made industrially, but not economically. The increased use of labour saving tools, the separation into departments, the specializing of operations, the increase in size of engineering undertakings, have brought about changes, so that what is known as the "factory system," displaces the old conditions (preferable in a social sense) under which master and man knew each other. Now, "systems" must largely take the place of the individual responsibility upon which manufacturers formerly depended. This is particularly true as relating to the tool and gauge outfit. Under the modern system it will be found necessary to devise methods of rewarding labour which will assist to create and satisfy a class of workmen, of which there is at present a comparatively small supply; I refer to "tool makers." All is not done when engineers give more attention to training this class of men. They must pay them so that they can retain them and satisfy them. The prevailing standard of tool makers' wages is not such as to attract great numbers of men of intelligence and superior training, which are called for in designing, making and keeping in repair, a modern outfit of tools and gauges. Yet, without such men, a modern shop cannot be maintained in an efficient condition.

On the other hand, we find new conditions to deal with in the ordinary machine attendant. His demands must be so satisfied that he will be content day after day to do work which is little more than uninteresting routine, and still exert himself to turn out the highest product of which his tools and machines are capable. It seems to me that what is known as the premium system best meets the demands of the machine operator, and that high day wages are necessary for the tool maker.

Better Shops.

With costly outfits of tools and fine gauges, with elaborate auxiliary equipment, high-waged employees, increasing demands for comfort on the part of workmen, but little argument is necessary to demonstrate that improved workshops are the order of the day.

Why buy expensive outfit, arrange complete stores, put in new tool rooms, endeavour to create and retain high-class workmen, and then allow shops to remain in such a condition of moisture, temperature, dirt, disorder and darkness, that it is impossible to keep tools and gauges in good condition, or to retain desirable men. If shops are not heated, fine tools and gauges soon rust and go to ruin; if they are not clean, dust and dirt spoils them; if they are not light, fine tool work is impossible; if they are not comfortable and hygienic, good men will not be content to work in them.

Discussion.

Mr MATTHEW PAUL (Member of Council) said he had read Mr Orcutt's paper with a very considerable amount of interest, and he was sure that, to anyone who was occupied in the usual engineering work, the subject must be of very great interest indeed. He would only make a remark generally that Mr Orcutt had put forward considerations which one might call counsels of perfection. Everyone would like to be in the position of carrying out all the suggestions that Mr Orcutt made as to how the modern engineering workshop should be organized, and how the plant should be utilized to the best advantage. Mr Orcutt hardly pointed out sufficiently clearly that while in a shop which was turning out numbers of small articles, the processes which he described would certainly be of the very greatest possible value in producing accuracy and economy, the case was not quite the same where one, or a few articles in every respect similar, were being dealt with at a time. A very good instance of that was the "stud" which Mr Orcutt showed in his paper, and illustated three sets of tools for producing it. He knew from experience that it would be absolute folly to set up the tools in the semi-automatic or fully automatic machine to deal with one stud. The stud could be produced by the ordinary methods in less time than it would take to set up tools to deal with them. He would like very much if Mr Orcutt could state his idea as to the minimum

Mr Matthew Paul.

number of studs similar to that shown which, in his opinion, it would pay to deal with in the way he proposed. He knew the number they considered the minimum, which was worth their while to tackle on these machines, but anything over that number it certainly paid well to deal with by the methods which Mr Orcutt described. Then there was another point; a very large reduction in the cost of a piece might be secured by putting down a special machine to deal with that piece; but unless the number of these pieces that might be dealt with in a year were taken into account, and unless the total reduction in cost in the number of pieces over a year was greater than the interest and depreciation chargeable to that machine, it did not pay to put it in. He thought that was where Mr Orcutt, and gentlemen who were in his position—and to whom they would all frankly admit that they were very deeply indebted for hints as to how their productions in accuracy and cost could be improved—were somewhat liable to mislead engineers; not in misstating what the machine would do, but in not sufficiently cautioning the men who were going to use the tools, that unless the output could be maintained at a certain amount the machine would not pay. These were the only criticisms he could make, and he would again say that he had read Mr Orcutt's paper with very great interest.

Mr James Rowan (Member) agreed with Mr Paul that Mr Orcutt's idea of a workshop was a very ideal one, and he would not advise anybody to take Mr Orcutt's paper wholly as gospel. Everyone on reading it must use his own discretion, but certainly he had placed before them some very prominent and excellent features which might be introduced into workshop management with advantage. It seemed to him that Mr Orcutt had in many cases got adrift from his paper, which had been based upon a workshop like his friend Mr Renold's, where some three million articles per week were turned out in every respect similar. That was highly specialized work, where tools could be placed in a tool room equal in value to one-half of the working tools with advantage, but in a general engineering work, such as Mr Paul's or his

Mr J. Rowan
own, if the paper were religiously followed he thought they would be in the bankruptcy court very shortly. He wondered whether in the Clyde district men could be got who had served no apprenticeship, and who in the course of a few weeks would be good operators. The only class of men that he could imagine was labourers, and in many cases they were hardly fit to wheel a barrow much less attend to a machine of very considerable value. Speaking of the operator of the modern labour saving machine, Mr Orcutt said, "He rarely grinds his own tools nor does he set them. He rarely sees the part he produces 'fit' into any other part. His work is 'passed' by an inspector." That might be good for special work, for the manufacture of machines and lathes and that class of work, but for general skilled work it was totally inapplicable. Referring to the stud to which Mr Paul alluded, he was sure that all manufacturers in this country who had served an apprenticeship had turned out similar things as apprentices, in fact it was apprentices' work and not a journeyman's work. Mr Orcutt said of the turret lathe that "this machine is usually partly automatic; tools and stops by which dimensions are regulated are usually set by the tool maker, so that for accuracy the workman is not very much relied upon" That was all very well where articles such as studs were turned out by the dozen, but in no general engineering work was that done, and if he had an automatic machine for that purpose he would undertake to supply every marine shop on the Clyde with these or similar articles. He did not know why Mr Orcutt put workmen of the highest skill and intelligence into the tool room any more than into the workshop. It seemed to him that in the tool room, where they could manufacture jigs and fixtures, there ought to be a tradesman or some superior kind of workman, but there was no necessity for the workman being any better there than other workmen in the workshop. He thought that if anyone were thoroughly modernizing his works instead of putting in the tool room first, as suggested by Mr Orcutt, he would put it in last and then he would know what to do. The gauges in a workshop were of comparatively small value, and one did not take long to

Mr J. Rowan.

arrive at what was required. Referring to the increased use of accurate gauges, he agreed with Mr Orcutt when he said "There are surprises in store for those who have given little attention to this matter, not only surprises as to the inferior, but in many cases as to the superior work done by their best workmen." That was a point which he had noticed, and it was amazing to see what good workmen could turn out with indifferent tools. The training of the men was a point on which Mr Orcutt had got sadly adrift. One would almost assume, in reading the paper, that there was some royal road to engineering, and that if tool rooms and gauges were adopted, apprentices would learn their trade in as many months as they now took years, and even in those years they did not learn it well. Mr Orcutt would lead one to believe that there was very little use in serving an apprenticeship, but he (Mr Rowan) believed an apprenticeship was now required more than ever. Mr Orcutt said, "Why train a man seven years to do that which a workman, aided by a modern set of tools in the proper machine, can learn to accomplish in two months." So far as that statement was concerned, he thought it was altogether out of place. Experience in the Clyde district went to show that men were not available; there were no men to draw from, and so it was necessary to train apprentices. He did not suppose that their shops were remarkably clean or comfortable or that there was anything special about them; and yet, according to Mr Orcutt, he was surprised that they had any apprentices at all. There were none of these workshops specially up to date, but he believed that they had as good a class of men in them as were to be found in any district in the world. One thing about this paper was that it brought out all the good points for doing repetition work cheaply, and doing it well. The query was for those who were doing general work to take advantage of it, and to make as much use as they possibly could of the tools and gauges advocated in the paper.

Mr E. Hall-Brown (Member of Council) observed that Mr Orcutt had explained to him that the chief object of his paper was to promote a thorough discussion of the machine tool question,

Mr E. Hall-Brown.
that being so, he thought Mr Orcutt would be very pleased with the remarks of Mr Rowan and Mr Paul. The particular point that occurred to him was the one raised by these gentlemen, namely, that the system advocated in the paper was only applicable to the manufacture of very large quantities of duplicate parts, and he would have liked Mr Orcutt to have dealt with the question that appealed to most of them, namely: How the ordinary general engineering establishment should be equipped? This point had been raised by Mr James Rowan, whom they all recognised as one of the pioneers of modern works' management in Glasgow, and whose remarks must always carry great weight with them. It was therefore a matter worthy of note that, in Mr Rowan's opinion, a very great deal could be done without throwing over all their old methods of manufacture. For instance, it might be asked how far would a system of gauges, even "limit" gauges, assist in turning out a connecting-rod for a marine engine in less time than was ordinarily taken? That was a thing which could not be done in any automatic lathe that he had seen. There was undoubtedly a place for automatic and semi-automatic machines; but in some works that he had visited where semi-automatic machines had been adopted, and this matter had been gone into pretty largely, the impression left on his mind was that more time was lost in preparing the tools and jigs than was gained in the speed at which the work was done. Of course that would depend upon the class of work, but in a marine engine shop turning out, say, 20 sets of engines per annum, it seemed to him that there would be more loss than gain. He would not put that down as an actual fact, but it was the impression left on his mind. That might be due to the fact that the system was not carried out in the best way. Some one must be a pioneer, and complete success could not be expected at first, but probably improvements would take place as time went on. There always remained another doubt, and that was whether parts of machinery turned out under the new system were superior or even equal to parts of machinery turned out under the old. The point he referred to was this: Was a bolt

turned from a bar to be accepted as equal in all respects to a bolt forged in a skilful manner? He was aware that a forged bolt might be spoiled in the forging; but, in his opinion, a well forged bolt was a better bolt than one turned out of a hexagonal bar, given the same quality of material in each case. A great deal had been heard about the accuracy of parts turned out by automatic and semi-automatic machines, but he had never found any that he could depend upon being to the size intended within the one-thousandth part of an inch or anything like it. A very good example of work, exactly suitable for production by automatic machinery, was the manufacture of bicycle parts. Yet, his experience was that no two parts bought from the same maker were similar in all respects, and, as a rule, they fell far short of the high standard of perfection which was usually claimed for automatic production. It might be that he was old-fashioned in his views, if so, he would like Mr Orcutt to give him some hints regarding the application of the new methods to a marine engine works.

Mr A. Marshall Downie, B.Sc. (Member), joined in the discussion on this most suggestive paper more with the view of soliciting further information from Mr Orcutt, and others who could lay claim to more experience than he had on the subject, rather than to say anything original. He would, however, not be inclined to admit that the purchasing of new outfit was an unpleasant task for those who were directly responsible for dividends, because if the new plant were purchased with discrimination, it should tend towards better dividends. Mr Orcutt had said that it was his intention to bring before the Institution the equipment of a shop for doing general engineering work, but as Mr Rowan had pointed out, he did not think Mr Orcutt's intention was fully borne out in his illustrations, because he confined himself mostly to small work, such as studs and two-inch shafts. In fact, when one spoke of men operating six to ten automatic machines, pieces of any great size were obviously excluded, that being so, surely the subject had hardly been adequately dealt with. For moderate sized or

Mr A. Marshall Downie, B.Sc.

large work: Would it be probable or even possible to use automatic or semi-automatic machines? He thought that in such cases (which embraced the bulk of general engineering work) the most profitable policy would be to employ modern machine tools working with a high cutting speed, but not necessarily taking heavy cuts, as this was seldom necessary if the work was well designed. These tools could be attended to by skilled machinemen who would work on a piece-work or premium system. It would generally be found that the work could be divided into different classes to suit various machines, and the tool room operatives could be employed in making equipment of tools for turning out this work in the most expeditious manner. He did not think this would diminish the need for skilled machinemen, in addition to those who acted as inspectors under the premium system. He was inclined to think that Mr Orcutt had not made a sufficient distinction between fitters, erectors, and machinemen, as the terms were understood in the Clyde district, and thus his remarks regarding apprentices or the training of apprentices would seem to be somewhat misleading. The reference to Mr Renold's work, although very interesting, did not, he thought, have much bearing on the subject as Mr Orcutt set out to describe it. Mr Orcutt referred to the lack of free interchange of ideas between the drawing office and the shop, but in his (Mr Downie's) opinion nothing tended to a better appreciation on the part of the designer of the most suitable forms for economical and rapid machine work, than some system whereby the time to be taken on each operation was made out in the drawing office and discussed with the shop officials, before the work was put in hand. By this means also the management had a much better grip of the work as it proceeded through the shop. He had to express his thanks to Mr Orcutt for his interesting paper.

Mr Angus Murray (Member), in looking over Mr Orcutt's paper, felt rather disappointed, and thought the title would have been better had it been "Some application of tools and gauges for Mechanical Factories." He quite agreed with all Mr Rowan had

Mr Angus Murray.

said as to the very limited service that such gauges had in the general engineering shop. Still, there was a very wide field for the application of automatic tools. As to the query what quantity of any piece would warrant their application, this could only be determined by considering when would a saving be effected by their use. His firm carried out a great deal of repeat work, but so far had not found the advantage to warrant the adoption of automatic tools; they found that ordinary forged studs with collars could be produced on the common lathe more cheaply than the same stud could be produced from rolled or turned bars on the automatic machine. The increased cost of turned bars and the loss in material being greater than the cost in time saved. In one instance, where 360 studs were required, the necessary tools for producing these on the automatic machine with time and material would have cost about 2s 9d per stud, the selling price of the studs was 2s 6d, and they were made on the ordinary lathe. As to Mr Hall-Brown's question concerning the relative advantage in strength of a forged stud over one turned from a solid bar, he considered this did hold where studs or bolts were of wrought iron, but it did not apply to mild steel, as forging in the usual way would not improve it. Regarding the apprenticeship question, he thought Mr Orcutt was under some mistake as to the term of apprenticeship; the usual time was five years in this district. There was no difficulty in getting apprentices, but no doubt there might be in such factories as Mr Orcutt would have, and it would be a great misfortune for any young man to have to serve his apprenticeship in a shop wholly equipped with automatic tools and fixed gauges. A workman trained with such would make but a poor specimen when put to work, when his first production was from the usual drawing and to work with ordinary calipers. It would be infinitely better for young men to be trained in shops less lavishly equipped, even were it only in a country smithy it would be in a place where necessity would awake invention. In works where repeat work could be standardised the automatic tools and gauges were a necessity, but for the general engineer to equip a

Mr Angus Murray.
shop with such tools to do ordinary work would be folly and spell ruin.

The PRESIDENT said that Mr Orcutt was unfortunately absent, but he had no doubt he would reply to the remarks that had been made as far as he possibly could. In the meantime he thought the Institution owed Mr Orcutt a very hearty vote of thanks for the trouble he had taken in preparing this paper and coming to deliver it.

The vote of thanks was cordially given.

Mr ORCUTT, in reply, said that the turn which the discussion had taken would indicate that he had not succeeded in bringing out as clearly as he had hoped one of the principal objects which he had in view in preparing the paper. It was thought best to shortly restate the main object of the paper, and, in doing so, possibly some of the criticisms made by those who took part in the discussion might be partly answered. Reference could be made at once to Mr Paul's remarks about the "stud," tools for making which were shown in Figs. 2 and 3. The sets of tools shown were not brought forward to illustrate the desirability of making a stud in any particular manner, but rather to show the tendency of modern tool equipment. There were any number of shops where it would not pay to purchase a turret machine, but the number of shops now profitably employing turret machines, compared with conditions, say, fifteen years ago, was very large. It was also true that the number of shops employing turret machines, in which the tool making was unprofitably carried out, was large. It was not the special object of his paper to advocate the adoption of turret machines, or any other machines, but rather to assist those who had invested in modern machines to make the best use of them. It was hoped that the contrasting sets of tools shown in the Plates would help to do this. Mr Paul asked, "What was the minimum number of studs it would pay to deal with in the way proposed?" Before he answered that question he hoped Mr Paul

would pardon him if he asked him to look at the paper once with a view of finding any special plea for the adoption of the turret machine. In shops where the tool question was well understood it was often found to pay to set up a turret machine for twelve or even a less number of parts similar to the one shown. The better the tool staff and equipment, the smaller the number that could be profitably dealt with. Mr Rowan's warning not to look upon the paper as gospel was timely. He thought Mr Rowan would admit, from his own experience, that there was no such thing as a machine shop "gospel," or rather that one gospel succeeded another so rapidly that it was dangerous to pose as a prophet. Mr Hall-Brown had touched upon an important point in referring to the non-interchangeability of cycle parts. These were now made in large quantities, and the fullest advantage should be taken of the modern tool and gauge outfit. The lack of interchangeability, mentioned by Mr Brown, was due to the fact that most cycle makers did not pay sufficient attention to :—

1. Keeping their tools in the best condition.
2. To inspection.
3. To gauge equipment.

He thought a better example could not be found than the cycle makers, where, generally speaking, modern machines had been largely adopted, and modern methods had been largely neglected. There were a number of notable exceptions to this. It was of interest to note that one of the leading and most successful makers of cycle parts employed something like seventy operators for inspecting alone. To comply with Mr Brown's request, and give some hints as to the application of new methods to marine engineering work, was rather a tall order. He believed, if Mr Brown would look into the matter, however, he would find quite a number of the methods outlined in the paper which were applicable to marine work. He should be most pleased, if opportunity occured, to show Mr Brown some of them in actual operation, and which were working to the satisfaction of those who had made the invest-

Mr Orcutt.

ment. The above remarks would also be applicable to Mr Downie. The tools shown and the cases cited were mainly used to illustrate a principle. The experience of those who had taken up the gauge question thoroughly was quite the opposite to the opinions expressed both by Mr Murray and Mr Rowan.

EXPERIMENTAL AND ANALYTICAL RESULTS OF A SERIES OF TESTS WITH A PELTON WHEEL.

By Mr Wm. Campbell Houston, B.Sc. (Member).

(SEE PLATES XXI. AND XXII.)

Held as read 24th March, 1903.

The Pelton wheel is a type of turbine which, for many purposes, possesses great advantages over other types. The general principles however involved in its action are similar to those connected with the action of some types of steam turbines. For these reasons the author thought that, a paper giving an account of a long series of tests of a Pelton wheel working with a pressure of water from 200 lbs. to 1000 lbs. per square inch, together with an analysis of the results, would be of interest and use to Members of the Institution.

The object of the tests were in the first place to get the power and useful efficiency of the wheel; and secondly, to analyse as fully as possible how the water energy was spent.

To represent the energy, let P be the pressure of the water in lbs. per square foot, and Q the quantity of water used in cubic feet per second. Then the available water horse power is

$$= \frac{PQ}{550}.$$

When the water pressure is obtained by a pressure gauge, and the quantity of water by a weighing machine, the available water horse power can at once be calculated.

If in a jet of water the discharge in lbs. per minute W, and the area of the nozzle be known; and the calculated velocity of the water in feet per second be V; then the jet horse power is

$$= \frac{W V^2}{2g \times 33{,}000}.$$

Now, there is a difference between the horse power as obtained

from the pressure and the quantity discharged, and that obtained from the velocity and the quantity discharged. The quantity discharged is the same in both cases, but the velocity energy is not equivalent to the pressure energy.

The velocity in feet per second is equal to

$$c\sqrt{2gH}$$

where H is the head in feet equivalent to the pressure, and c is the coefficient of velocity for the nozzle.

The value of c varies from about ·8 to ·97. The latter value is obtained from a thin orifice; the coefficient for nozzles is less, and depends on the taper and size of outlet.

The difference in power from the above two equations represents the loss in the nozzle.

The power as given by

$$\frac{PQ}{550}$$

may be called the available water horse power, and the power as given by

$$\frac{WV^2}{2g \times 33{,}000},$$

the jet horse power.

Some makers calculate the efficiency of the Pelton wheel as

$$= \frac{\text{Brake horse power of wheel}}{\text{Jet horse power}}.$$

This is admissible in dealing with the efficiency of the wheel itself, but not when the complete prime mover is considered. The nozzle forms part of the machine, and must be taken into account when dealing with efficiency.

In this paper all the efficiencies are calculated with the available water horse power as denominator.

Having given an available head and supply from natural sources, or a pressure and supply from a town hydraulic system, the question is: How is this energy to be utilized? As the energy of the jet is proportional to its velocity squared, it is desirable to have as

large a velocity of jet as possible. The value of this velocity will obviously depend on the pressure and shape of the nozzle.

The equation for the discharge from a nozzle is—

$$Q = c A 8 \sqrt{2 \cdot 3 p}$$

where Q is in cubic feet per second.

A, the area of nozzle in square feet.

p, the pressure of water in lbs. per square inch, and

c, the coefficient of velocity.

It is necessary to determine whether c is constant for all pressures, or if c is a variable depending on the pressures.

To ascertain this, three nozzles were tested at pressures varying from 100 lbs. per square inch to 1000 lbs. per square inch.

The amount of water discharged was found by a weighing machine and the pressure obtained by a pressure gauge. The results were plotted in a curve for each nozzle connecting W, the lbs. of water discharged per minute, with p, the water pressure in lbs. per square inch, Fig. 1. A value of c was obtained for each nozzle which was found to be independent of the pressures.

TABLE I.

Diameter of nozzles in inches.	Water discharged in lbs. per min. W	Value of coefficient of velocity. c	Efficiency of nozzle which is proportional to c^2
0·0724	$W = 1\,10\sqrt{p}$	0·845	0·71
0·0835	$W = 1{\cdot}54\sqrt{p}$	0·892	0·80
0·1023	$W = 2{\cdot}50\sqrt{p}$	0·958	0·92

The nozzles used in the tests were similar in every respect except the size of outlet, and were made of gun-metal, Fig. 2.

Now, the available water horse power is

$$\frac{QP}{550}, \text{ which } = \frac{W \times 144\,p}{62\frac{1}{2} \times 60 \times 550} = \text{Constant} \times p^{\frac{1}{2}};$$

since W varies as $\sqrt{p}$

The quantity of water used varies as the square root of the pressure, so that the water used per horse power hour varies as

$$\frac{p^{\frac{1}{2}}}{p^{\frac{1}{2}}}, \text{ that is as } \frac{1}{p},$$

providing the efficiency of the wheel remains constant.

The tests show that the efficiency of the wheel at maximum powers for different pressures is practically constant. The maximum efficiency obtained at 200 lbs. pressure was 45 per cent., and gradually increased to 52 per cent. at 1000 lbs. pressure. The power developed at 1000 lbs. is very much greater than that at 200 lbs.; and as the turbine was designed for 1000 lbs., the small difference in efficiency is due to this cause. Theoretically, the power ratio is—

$$\left(\frac{1000}{200}\right)^{\frac{3}{2}} = 11{\cdot}2,$$

but from horse power curves, Fig. 5, the ratio is 12·9. It is important to note, therefore, that if the wheel be allowed to work at its maximum efficiency for different pressures, the water used per horse power per hour, and consequently the cost, vary inversely as the water pressure.

Great difficulty was at first experienced in arranging a reliable brake on account of the high speed of rotation. Experiments were made with a grooved pulley which gave good results at small powers, but it was found to be unsuitable for larger powers as the rope got burnt out. When excess of water was used, the two pulls on the rope were excessive and affected the shaft friction. Similar difficulties were experienced with a belt on a flat pulley.

Good results, however, at all powers throughout the tests were obtained by means of a Prony brake, which enveloped the wheel rim and sides. Water grooves were cut to assist in keeping the wheel cool, and soap was sometimes used, but it was not necessary. The water supply was delicately adjusted, and the brake readings were taken by means of a spring balance, the adjustment for keeping the brake arm horizontal being effected by means of a union screw, Fig. 3.

The revolutions were recorded by means of a speed counter. In taking the readings the following method was adopted:— With a nozzle of fixed diameter, observations were made at pressures varying from 100 lbs. to 1000 lbs. per square inch, increasing by steps of 200 lbs. per square inch. The wheel was run light, no difference being made to the water discharged. The brake was then put on, and tests made at varying loads from zero up to a maximum, the water pressure remaining in the meantime constant. About twelve readings of the brake balance and corresponding revolutions were taken at each pressure, and the results plotted in the form of curves. The curves obtained for the largest nozzle of ·1023 inches diameter are shown in Fig. 4.

From these curves the brake reading corresponding to any given speed may be obtained, or *vice versa*, at any given pressure. The mean diameter of the Pelton wheel under consideration, is 11·4 inches; and Table II. has been drawn up assuming v to be the velocity of the wheel cups in feet per second, and V the velocity of the jet in feet per second calculated from the quantity of water discharged and the area of the nozzle.

From these figures, a set of curves, Fig. 5, has been drawn, which show how the power increases with the pressure.

As previously stated, the maximum power obtained varies approximately as (pressure)$^{\frac{3}{4}}$.

The maximum power was obtained at different speeds for different pressures, and in every case was about 0·52 of the speed of wheel when running with no load.

The curves show clearly that the best speed for a Pelton wheel

is that which gives maximum power, and it will also be seen that the range of speed for best efficiency is small in a Pelton wheel.

A curve connecting efficiency and ratio $\frac{v}{V}$ for a nozzle, ·1023 inches in diameter, and for 700 lbs. pressure is shown in Fig. 6. From this and similar curves drawn for the three nozzles, it is found that the maximum efficiency at all pressures occurs when the velocity of the wheel cups is approximately 0·36 of the velocity of the jet. The knowledge of this value is of great importance in the design and running of Pelton wheels.

Curves plotted in terms of efficiency and revolutions for each pressure show that the maximum efficiency is approximately the same at all pressures.

The aforementioned data apply only to the useful work and the efficiencies at various pressures and speeds, but another set of experiments is necessary in order to investigate what becomes of the energy in the jet which is not given out as useful work by the wheel. A certain amount of energy is required to overcome the frictional and air resistances of the wheel. The remaining energy is dissipated in shock, friction, and residual energy.

It is necessary then to determine how much power is required to drive the wheel itself at different speeds, and to obtain this data the full water pressure was supplied. When the speed reached a maximum the water was suddenly screwed off, and at the same instant a speed counter was applied to the wheel. The time was taken at the start and after every 100 revolutions, until the wheel came to rest, when the time was again noted. These results are shown in Fig. 7.

By drawing tangents to this curve, a curve connecting revolutions per second with time, may be obtained, and by drawing tangents to this second curve, a curve connecting accelerations per second may be drawn. Now the rate of change of moment of momemtum is equal to the retarding couple; and the rate of change of moment of momentum is equal to the angular acceleration × moment of inertia of wheel.

TABLE II.

Water pressure in lbs. per sq. inch.	Corrected readings from curves.		B.H.P. $\frac{2\pi R \cdot w N}{33{,}000}$ $w N$	Available Water horse power = $\frac{P Q \div 550}{n i}$	Efficiency of Pelton wheel.	Horse Power assuming ideal wheel $2W(V - v)v$	Velocity of buckets in feet per second	Velocity of jet in feet per second	Ratio $\frac{v}{V}$
	Brake	Revs. per minute							
	6	2610	1·50		·465	2·88	130·5		·42
	7	2310	1·58		·49	2·73	115·5		·37
	8	2100	1·60		·495	2·60	105		·34
	9	1700	1·46		·453	2·34	85		·27
1000	0	4840	0	5·5	0	4·53	242	368	·66
	2	4520	0·864		·158	4·77	226		·61
	4	4170	1·60		·292	4·92	208·5		·57
	6	3810	2·18		·40	5·0	190·5		·52
	8	3400	2·60		·472	5·0	170		·46
	10	2960	2·82		·513	4·83	148		·40
	12	2500	2·86		·52	4·5	125		·34
	14	1975	2·64		·48	3·92	98·7		·27
	15	1700	2·44		·444	3·55	85		·23
	16	1415	2·16		·392	3·15	70·7		·19

Therefore retarding couple = angular acceleration × moment of inertia of wheel,

$$i.e., \quad L = \frac{d^2\theta}{dt^2} I = \dot{\omega} I = 2\pi \dot{n} I$$

Where L = retarding couple in ft. lbs.,

I = moment of inertia in lbs. ft.^{2},

$\dot{n}$ = minus acceleration in revolutions per second per second,

$\dot{\omega}$ = minus acceleration in radians per second per second.

The moment of inertia I is found from the wheel by direct measurement of its dimensions, and is

$$= \frac{W k^2}{32 \cdot 2}$$
$$= 0{\cdot}027 \text{ lbs. ft.}^2$$

where W is the weight of wheel in lbs., and k is the radius of gyration in feet.

Fig. 8 illustrates curves connecting the retarding couple with revolutions, and horse power absorbed in friction and air resistance. The horse power necessary to drive the wheel against friction and air resistances for different speeds

$$= \frac{2\pi N}{33{,}000} \cdot L,$$

It will be observed that the curve connecting the retarding couple and revolutions consists of a constant plus a variable. The couple required to overcome the shaft friction when the wheel is at rest, is slightly greater than the constant in curve.

It is found from experiments on friction that the static friction is greater than the friction at slow speeds, and with great increase of speeds the friction of a well oiled shaft increases in proportion to (speed)$^{\frac{1}{2}}$. (See Beauchamp Tower's experiments on journal friction).

In the case under consideration the pressure on the journals was exceedingly small, and not comparable with experiments giving

the above-mentioned law. At high speeds of rotation the resistance varies approximately as (speed)^2. Assuming the shaft friction practically a constant at all speeds, then the chief resistance is due to the fan action of the wheel.

In Fig. 9 is shown a curve of B.H.P. in terms of revolutions for the largest nozzle at 700 lbs. pressure. The horse power curve for an ideal wheel is also drawn from the equation.

$$\text{Horse power} = \frac{2W}{g}\left[\frac{V - v}{33{,}000}\right]v$$

Another curve is shown connecting what might be called the indicated horse power of the wheel and revolutions. This curve is drawn by adding to the B.H.P. curve, the ordinate from the curve giving the horse power due to friction and fan action.

The jet horse power is represented by a horizontal line, and

$$= \frac{WV^2}{2g} \times \frac{1}{33{,}000} = 2{\cdot}96,$$

while the available water horse power is also represented by a horizontal line, and

$$= \frac{PQ}{550} = \frac{700 \times 144 \times 2{\cdot}5\ \sqrt{700}}{550 \times 60 \times 62\frac{1}{2}} = 3{\cdot}22 \text{ H.P.}$$

The remaining losses are—(*a*) Loss due to cups cutting the jet. (*b*) Loss due to shock of cups splitting the jet, and cup friction. (*c*) Loss due to residual energy in water.

To find the loss due to the splitting action of the cups on the jet, and cup friction. The wheel was fixed and the water turned on. The brake was then carefully adjusted by means of a union screw until the maximum reading was obtained. The mass of water in lbs. per minute W, and the velocity of the jet in feet per second V, being known, as well as the discharge angle of the cups $\theta°$, then :—

$$\text{Force in lbs. } F = \frac{WV}{60g}\left[1 + k\cos\theta\right].$$

From this equation k may be obtained.

From experiment with a nozzle of 0·1023 inches diameter, and a water pressure of 1000 lbs. per square inch, we have—

$$W = 2{\cdot}5\sqrt{p} = 79 \text{ lbs. per minute.}$$

$$V = 368 \text{ feet per second.}$$

$$\text{Cos } \theta = 0{\cdot}97.$$

$$F = 23 \text{ lbs.}$$

$$\text{Hence } 23 = \frac{79 \times 368}{60 \times 32{\cdot}2}\left[1 + k \times 0{\cdot}97\right]$$

$$\therefore k = 0{\cdot}54.$$

If $k = 1$, the result is a force of 29·8 lbs.

Hence, percentage loss due to shock of cups splitting jet, and cup friction

$$= \frac{29{\cdot}8 - 23}{29{\cdot}8} = 0{\cdot}228 = 22{\cdot}8 \text{ per cent. of jet energy.}$$

As the efficiency of the jet for this nozzle is 0·92, the percentage loss on available water energy is equal to

$$\frac{{\cdot}228 \times {\cdot}92}{100} \text{ or } 21 \text{ per cent.}$$

To find the loss due to cups cutting the jet. The pressure on the brake balance with the wheel fixed and the jet entering the cups was 23 lbs. for the largest nozzle, and the water pressure 1000 lbs. per square inch.

This pressure is reduced when the wheel rotates, due to two causes—(*a*) The change of momentum is less when the cups are moving. (*b*) The pressure is reduced because the succeeding cups coming into position cut the jet and so cause loss due to shock.

To get this loss the curve connecting the B.H.P. and revolutions, Fig. 5, is continued to the zero point.

A few points are taken on the part produced, and corresponding points are obtained by calculation for the curve connecting the brake readings and revolutions, shown dotted in Figs. 4 and 5. For the largest nozzle at 1000 lbs. pressure, the curve cuts the vertical line through the origin at 19·8 lbs.

The pressure at the brake balance was 19·8 lbs., and this gave 20·8 lbs. acting at the cups.

Then $\frac{23 - 20{\cdot}8}{29{\cdot}8} = {\cdot}074 = 7{\cdot}4$ per cent. jet energy, or $\frac{{\cdot}074 \times {\cdot}92}{100}$

= 6·8 per cent. of available water energy.

Referring to the last loss, namely, the residual energy of the water, and taking the case of maximum efficiency for the largest nozzle at 1000 lbs. pressure—

The revolutions per minute,	- - -	= 2650
Velocity in cups in feet per second,	-	= 132
Velocity of jet in ,, ,,	-	= 368
Discharge angle of cups, θ,	- - -	= 12°
Coefficient of shock and friction, k,	-	= 0·54

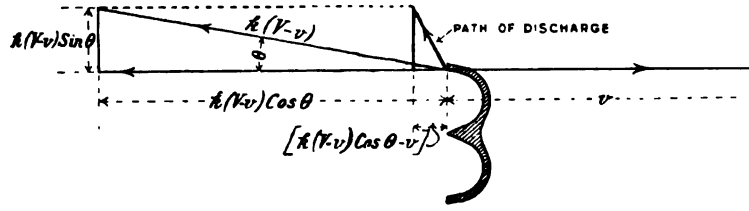

Fig. 12.

$$\left[\text{Residual velocity}\right]^2 = \left[k\,(V-v)\,\text{Cos}\,\theta - v\right] + \left[k(V-v)\,\text{Sin}\,\theta\right]^2$$

$$= (-8)^2 + (28)^2$$

$$= 848 \text{ (ft. per sec.)}^2$$

$\therefore$ Percentage loss due to residual energy :—

$$= \frac{848}{(368)^2} = 0{\cdot}63 \text{ per cent. of jet energy,}$$

$$\text{or, } \frac{{\cdot}63 \times 92}{100} = 0{\cdot}58 \text{ per cent. of available water energy.}$$

This loss is ·58 per cent. only at the point of maximum efficiency for the largest nozzle, at 1000 lbs. pressure. The residual energy loss is different at different speeds. It is a maximum when the wheel is at rest, and is a minimum in an ideal wheel when the velocity of the cups is half the velocity of the jet. At greater speeds the loss again increases as may be seen from Table III.

The loss due to the cups cutting the jet when coming into position, and the loss due to cups splitting jet, and cup friction, will

Table III.

Showing how the Available Water Energy is Utilized.

	Nozzle 0·1023" dia.			Nozzle 0·0835" dia.	
Water pressure in lbs. per square inch, - - -	1000	1000	1000	1000	700
Revolutions per minute of wheel, - - - - -	2650	3000	4000	2480	2000
	Per cent.	Per cent.	Per cent.	Per cent.	Per cent.
Energy utilized in nozzle, - - - - -	8·0	8·0	8·0	20·0	20·0
Energy utilized in shock due to cups cutting jet, -	6·8	6·8	6·8	4·2	6·0
Energy utilized in shock in splitting jet, and cup friction,	21·0	21·0	21·0	20·7	20·9
Residual energy, - - - - - - - - -	0·6	1·3	8·8	0·7	0·5
Energy utilized in air resistance and shaft fraction, -	6·7	9·0	20·8	8·8	6·3
Energy utilized as useful work, - - - - -	52·0	50·6	33·8	45·0	43·0
Total energy equals 100 per cent., - - - - -	95·1	96·7	99·2	99 4	96·7

decrease slightly with increase of speed. In Table III. these losses have been assumed to be constant.

Similar calculations have been made with the intermediate nozzle ·0835 inches diameter, and the results obtained are shown in columns 4 and 5, Table III.

In endeavouring to increase the useful efficiency of a Pelton wheel, the losses must be carefully analysed, as the preceding figures show. The losses for the largest nozzle are not excessive, but they increase rapidly as the size of the nozzle decreases.

The residual energy loss could not be much less at a speed corresponding to the maximum efficiency; and the percentage loss due to air resistance and shaft friction does not admit of any great reduction, as great care was taken during the tests to keep the journals well lubricated. The other two losses ought to be reduced by a more perfect design of the wheel cups.

The design of the various parts of a Pelton wheel does not come within the range of this paper, but it must be remembered that the construction of the cups should invert the direction of the water jet completely and uninterruptedly on continuous curves.

Complete reversal of the jet is not obtained in the cups of the Pelton wheel under consideration. In Fig. 11, three views of the cups are illustrated which show the various angles in their design and the relative position of the nozzle.

No governor was used in the tests, as in every case the predetermined load was as constant as possible. From a study of the curves given, it follows that, in utilizing water power care is required in a higher degree than in making use of steam power, in adapting the amount of work obtainable to the precise quantity of power, or *vice versa*. This means that a cubic foot of water does more useful work when the load and power are well adapted to one another than it does when there is a discrepancy between the two.

Discussion.

The AUTHOR remarked that there were no governors at his disposal, but such were unnecessary, for the predetermined load was as

The Author.

constant as possible. Only one type of bucket had been used in the tests. The members would see that the main object of the paper was an analysis of the losses which took place necessarily in a Pelton wheel. The figures in Table III., if carefully studied, would give one a fair idea of those losses. It would be noticed that they did not total 100 per cent., the reason for that being that every percentage was positively obtained. He should be pleased to answer any questions regarding any of the equations.

Mr Allan Coats, jun., B.Sc. (Member) observed that he was struck with the low efficiency tabulated by Mr Houston, namely, 50·6 per cent. He had been accustomed to regard a Pelton wheel as one of the most efficient of water motors. In America they even worked with an efficiency of 80 per cent. He noticed that the most of the loss took place in the bucket, the loss there, according to Mr Houston, being 28 per cent. He should like to ask Mr Houston—apart from the design of the bucket, which was evidently not modern—if he did not consider that the amount of water passing through the buckets was too small. Of course, if the friction were excessive, due to there being a very thin layer of water on the bucket, that would account for a very large part of the loss. The energy utilized in the nozzle was 80 per cent. and he should consider that very good for such a small nozzle. Mr Houston had pointed out that he had not tried any governor. If he had, the efficiency of the nozzle would probably have gone down very much more. He (Mr Coats) had taken the liberty of placing before the meeting a section of one of the more recently used Doble nozzles, an illustration of which had appeared in "Engineering" some four weeks ago. It would be noticed that with this nozzle the water had a direction towards the apex of the spear, and as a result, the water left the nozzle in a beautifully clear and solid jet. With the ordinary Pelton nozzle, the efficiency fell off very much on account of the shape of the nozzle and spear. As the water flowed out of the nozzle it changed from a small area and maximum velocity, to a large area and small velocity, so that if only $\frac{1}{5}$ of the maximum amount of water was issuing from the

Mr Allan Coats.

jet it would only have approximately $\frac{1}{5}$ of the maximum velocity and $\frac{1}{25}$ of the maximum energy. On the other hand with the Doble

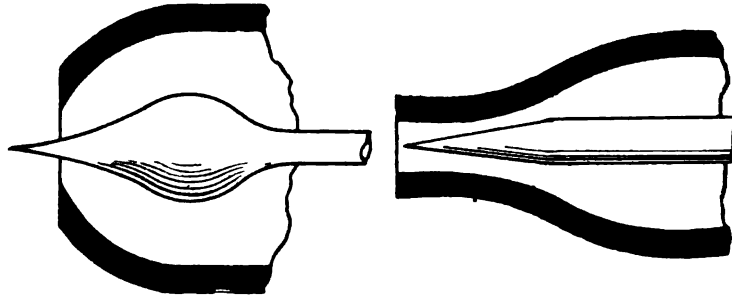

Doble Nozzle. Pelton Nozzle.

Fig. 13.

nozzle the area of the jet never increased after it had reached its minimum, and the velocity of the water at $\frac{1}{5}$ of the maximum discharge was as great as at full power and therefore the power was only reduced by $\frac{1}{5}$ instead of $\frac{1}{25}$ as in the ordinary nozzle.

The PRESIDENT asked Mr Coats if he could give any idea of the efficiency af the Pelton wheel with the Doble nozzle

Mr COATS.—The total efficiency was slightly over 70 per cent., but Mr Doble was also the inventor of the ellipsoidal bucket which he claimed was a very great improvement on all previous buckets, and he had not given what per centage of the improvement he ascribed to the nozzle and what percentage to the bucket. At full power there was practically no difference between the two nozzles.

Mr JOHN BARR (Member), like the last speaker, had been a little disappointed with the efficiency of the Pelton wheel, and he had come to think that Pelton wheels were not so efficient as they were made out to be. Some years ago, the firm with which he was connected had occasion to make a Pelton wheel to work with a hydraulic pressure of 700 lbs. per square inch. When made,

the wheel, which was 18 inches in diameter, was put to all possible tests, and the results showed efficiencies ranging from 43 per cent. with one jet to 55½ per cent. with two jets. This was not considered satisfactory, and a wheel was ordered from a well known British maker who was supposed to be an expert on wheels, and who guaranteed an efficiency of, he thought, 60 per cent. On delivery the wheel was tested, with the result that with one jet an efficiency of 48 per cent. was realized, and with two jets only 50 per cent. The maker's principal draughtsman came to see the tests carried out, and went away satisfied that they were correct. Still his firm were not satisfied that the Pelton wheel was the best that could be produced, so they ordered a wheel from a firm in New York, whose circulars and letters led one to infer that they were experts in Pelton wheels. He thought that 65 per cent. was the figure which this firm said would be obtained, and his firm took care to make it quite clear that they must have the efficiency promised, on carefully carried out brake tests. He might state that with their own wheel the jet was $\frac{3}{16}$ of an inch in diameter, and with the British wheel also $\frac{3}{16}$ of an inch. When the American wheel was tested with one jet $\frac{3}{32}$ of an inch in diameter an efficiency of 43 per cent. was realized, and with two jets 51·1 per cent., and the Americans had to take their wheel back. He supposed all had heard stories of Pelton wheels having an efficiency of 60, 70, 80 and perhaps 90 per cent., but, so far as his experience went, that was all moonshine. There was another thing against the efficiency of the Pelton wheel. Unless the machine driven had to run at a very high speed, a great deal of power was lost in reducing the speed to drive anything that might require to be run at a low speed, which reduced, of course, the efficiency of the whole plant. The wheel that his firm had tried ran on an average about 1900 revolutions per minute, and it had been tested at various powers, from 3 B.H.P. to 10 B.H.P.; the members of the Institution would see that the figures which he had given agreed very closely with those stated by Mr. Houston.

Mr Angus Murray.

Mr Angus Murray (Member) remarked that his firm had constructed a few Pelton wheels, and he was very much surprised at the very low efficiency got by Mr Houston from his experimental one. In making experiments with Pelton wheels a great deal depended on the direction and position of the jet to the bucket as well as the size of the jet. A well known American firm guaranteed all their wheels to have an efficiency of 85 per cent., and the tests carried out by Professor M. E. Cooley of Michigan University on three different forms of wheel, two of them being of the vortex type and the other a Pelton wheel, comparatively small wheels and therefore low in efficiency, gave 55 per cent. efficiency for the vortex wheels and 80 per cent., for the Pelton wheel. Some time ago, his firm constructed a wheel, on the lines of the American wheel, to give out 16 H.P., for driving an air compressor. If any machine gave means of measuring the power very closely, it was an air compressor, because one could tell very closely what it was doing from the number of revolutions and the rise of pressure in the reservoir of a known size. This wheel, which was erected at Ballachulish, was calculated to give a maximum of 25 H.P. so as to leave ample margin. Before testing it a number of nozzles were made, varying from $\frac{5}{16}$ of an inch in diameter up to $\frac{5}{8}$ of an inch; the height of the fall being 750 feet. After very careful tests, both as to direction and size of jet, a nozzle was selected and the speed arranged so as to drive the wheel and compressor at half the velocity of the spouting jet, which was the most effective speed at which a wheel could run. On measuring the water used by means of the usual miner's water gauge, the combined efficiency of the wheel and the compressor was found to be over 60 per cent. This was not a laboratory wheel, and when these results were realized no further tests were made. He had enjoyed the reading of the paper very much, and if Mr Houston would like to see the data given by Messrs Fraser & Chalmers about which his remarks had been made, he could have it at any time.

Mr Archibald Denny.—Perhaps Mr Murray would state the size of the nozzle that he put on ultimately.

Mr MURRAY.—One and three-eighths of an inch.

The PRESIDENT.—What horse power did you get?

Mr MURRAY.—The horse power was not measured, but only the amount of water which passed through the miner's gauge. As regards the compressor, the capacity of the reservoir was known, and one could tell from the rise in the pressure and the number of revolutions what work was actually being done That was the only data obtained. Practical results were aimed at, and not such as were given by a small laboratory wheel with minute jets, which were liable to lead to great deception. From all he had seen of water wheels, where a fall of from 50 feet and upwards could be got, they were the most simple and efficient that could be used for any purpose.

Mr HOUSTON, in reply to Mr Coats, said no governor had been used in the tests, because, as he had already observed, the load was entirely predetermined. There were several ways of governing Pelton wheels, some of which were very inefficient and others very ingenious. Probably, the best method was by the Doble governor. One crude method was to have a sluice brought right across the mouth of the nozzle. When it was desired to reduce the power, centrifugal force drew the slide across the mouth of the orifice. In that way the shape of the jet was altered, and the losses due to splashing were greatly increased. This method was only useful when the heads were comparatively small. Another method of governing was simply to divert the jet from the buckets by centrifugal force. A very ingenious method was to have the Pelton wheel made in two halves, and by doing this, when the speed exceeded the normal, centrifugal force again made the wheel move axially so that part of the jet passed the cups. The advantage of the Doble method was that the velocity and the efficiency of the jet remained constant. With regard to Mr Barr's remarks concerning efficiency, one must remember that the Pelton wheel used was not a special wheel. The design of the buckets, he had no doubt, required great improvement. The brake horse power was comparatively small, the speed comparatively great, and the

Mr Houston.
pressures very large. The pressure of 1,000 lbs. corresponded to a head of 2,300 feet, and that, of course, was not usually obtained under natural circumstances. Another important point, which he thought ought to be carefully noted, was that the efficiency was constant under varying heads. Mr Barr referred to the high speeds at which it was essential for Pelton wheels to run at, but he (Mr Houston) had stated clearly in his paper that the best speed for a Pelton wheel must be ·36 of the velocity of the jet. Mr Murray said that the best speed was half the velocity of the spouting jet, but that was not so. In every case, under varying pressures, the velocity was approximately ·36 of the velocity of the spouting jet, and in every case the velocity of the wheel for maximum efficiency was ·52 of the velocity of the wheel when running light. These two principles were of great importance in the practical designing of Pelton wheels. With regard to what Mr Murray had said, he would suggest that the large nozzle gave least efficiency, due to a cause which he had neglected in making his preliminary tests. When the largest nozzle was used the wheel ran for about ten minutes, and then it slowed up, which was due to the exhaust pipe being too small. It was quite possible, in Mr Murray's case, that with the large jet the exhaust pipe was too small for the quantity of water which the jet allowed to pass, and in that case of course the efficiency would be considerably less. He would like to ask Mr Murray to state how he obtained his efficiency of 60 per cent. In the tests of the American wheels, the jet horse power would be taken as 100 per cent. In that case there would be from 8 per cent. to 20 per cent. apparent gain in the efficiency.

Mr Murray—In the case of American wheels he would only give what was vouched for. Regarding the tests that he had been speaking of, he could not say what efficiency belonged to the compressor and what efficiency to the wheel, as they simply measured the water that was taken away. They knew the revolutions and the rise in air-pressure in the compressor, and all that was aimed at was to get the work done. Mr Houston's paper was certainly a very valuable one, but he feared that the wheel ex-

perimented on was rather small to form a basis for comparison with actual practical work.

Mr Houston—It was quite obvious that the line of improvement in Pelton wheels must be in the design of the cups. With regard to Table III., he might point out that the nozzle used was turned very smooth inside and made of gunmetal, so that 8 per cent., he thought, was the least possible loss that one might look for. The energy utilized in shock, and the energy utilized in friction, was 27·8 per cent., and that could be easily reduced by a more perfect design of the cups. It was in that direction that one must look for increased efficiency. The residual energy was not excessive even at 4,000 revolutions per minute, and was a minimum at the point of maximum efficiency, viz,, 2,560 revolutions. The energy utilized in friction resistance and fan action could not be much reduced, as in every case dealt with the Pelton wheel journals were well lubricated. The totals in Table III. did not amount to 100 per cent. exactly, owing to the great difficulties which presented themselves in obtaining the data correctly.

The President said the Institution was very much indebted to Mr Houston for bringing this paper forward. The Pelton wheel was not so much used in this country as in America. He thought that in using this kind of motor in towns where water was to be obtained at a pressure of from 700 or 1000 lbs. per square inch, a very considerable amount of power might be obtained at a cheap rate. The paper did not deal with what might be termed the commercial aspect of the question, but from the figures given by Mr Houston, he thought it was quite possible for anyone to calculate what the cost per 1000 H.P. would be. He was sure that members present would join with him in according Mr Houston a very hearty vote of thanks.

The vote of thanks was unanimously agreed to.

Correspondence.

Mr C. A. Matthey (Member) said that Mr Houston appeared to come to the conclusion that, for Pelton wheels generally, the

best speed of buckets was 36 per cent. of the speed of water, that the best efficiency obtainable was about 52 per cent., and that the wheel running idle with the water full on ran at a bucket speed about 62 per cent. of that of the water, as shown in Fig. 6. With not one of these opinions could he (Mr Matthey) agree. All Mr Houston had shown was, that these statements were true for the particular wheel he had tried, which must have been of very faulty construction to have given such poor results. The torsion of the axle of a perfect wheel was proportional to the difference of the speeds of water and bucket, and the power obtained was the product of this torsion into the speed of revolution, or what was the same thing, the static effort on the bucket into its linear speed. Thus, in the adjoining Fig. 14, let O A represent the speed of water,

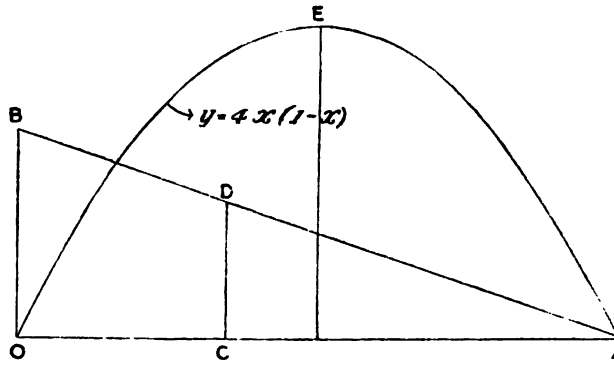

Fig. 14.

O B the static effort of the water on the bucket when the latter was standing still, and O C the speed of the bucket. Then the product O C. D C was the power spent on the wheel, D lying in the straight line joining B and A. Clearly, this product was a maximum when O C was half O A; and the efficiency was then theoretically unity. Since D C was proportional to C A the efficiency for any other speed of bucket was evidently a O C. C A, a being a constant; and seeing that for maximum efficiency the fraction O C. C A, was one-quarter, the value of a was 4. The curve O E A, representing the efficiency,

was evidently symmetrical about its central ordinate; thus, if OC were either 40 per cent. or 60 per cent. of the speed of water, the efficiency would be 96 per cent.; if 30 per cent. or 70 per cent., the efficiency would be 84 per cent.; for Mr Houston's speed of maximum efficiency, namely, 36 per cent., the efficiency was 92·16 per cent. Mr Houston's curve of efficiency, Fig. 6, was not symmetrical about its maximum ordinate, but indicated that there was some defect at high speeds of the wheel which did not exist, or existed in a less degree at lower speeds. All this, of course, was mere theory, which might be upset by practical considerations, but as a matter of fact reliable experiments in the United States showed that the best effect really was given when the speed of bucket was about half that of the water, and efficiencies from 70 per cent. up to 80 per cent., or even higher, were obtained. One very evident defect in Mr Houston's wheel appeared in Fig. 11; as the bucket advanced into the line of fire of the jet, it received the water on the wrong side, thus not only producing a retarding effect, but deflecting the jet so that it was lost to the preceding bucket. For it must be remembered that the water was striking two buckets at least, if not three, at the same moment, one behind the other; this might appear paradoxical at first sight, but it was undeniable. For in Fig. 11, let the lowest bucket be called No. 1, the next No. 2, and the highest No. 3; and suppose the wheel to be not quite so far round as shown, so that No. 1 was not at all in the path of the jet, but all the water was delivered into No. 2. Now, let No. 1, supposed to be a perfect bucket without any disturbing effect, come into the line of fire and intercept the jet; there remained in the air between No. 1 and No. 2 a bar of water, so to speak, running after and overtaking No. 2, although No. 2 was completely masked by No. 1 from the water now issuing from the jet, and (supposing the speed of the bucket to be one-half the speed of the water) the last particle of this bar would not have overtaken No. 2 until it was in the position occupied at first by No. 3. If the speed of the bucket were less than one-half the speed of the water, the bar of water

would have spent itself before position No, 3 was reached; while if the speed of the bucket were more than half the speed of the water the bar would not be all spent until a position still farther round than No. 3 was reached by No. 2 bucket, and then three buckets would be receiving water at once, because another one, say No. 0, would now have entered the line of fire. But, if the buckets in Fig. 11 were drawn correctly, the water struck the entering bucket on the outside, and glanced off clear of the two preceding buckets, so that a lot of water flowed clear of the wheel and struck the casing on the other side, having done nothing but produce a small but appreciable retarding couple. The way to determine the angle of the outside of bucket with the radius, so as to avoid this detrimental action, was as follows:—In Fig. 15, the lip of

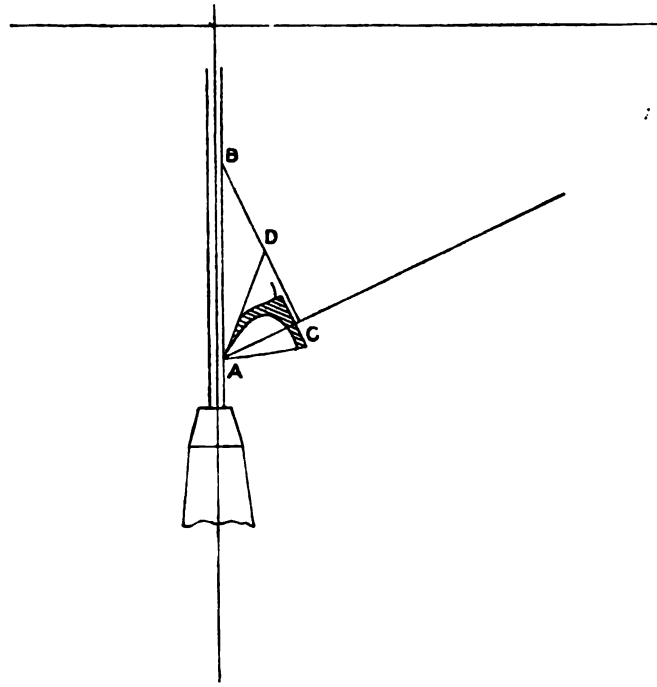

Fig. 15.

the bucket was shown just coming into contact with the edge of the jet at the point A; A C was a radial line; if A B, measured to any scale along the jet, represented the speed of jet; and B C were drawn perpendicular to A C; and B D made equal to the speed of the bucket; then B A D was the smallest angle which was consistent with the water clearing the outside of the bucket, and in practice it should be made slightly greater. Of course, if the bucket was standing still, A D might coincide with A B, but with the motion compounded of that of the water and that of the bucket, the angle B A D became necessary. Similarly, when Mr Houston's bucket No. 1 had the jet beating on its outside, as shown in Fig. 16, if it were standing still the water would

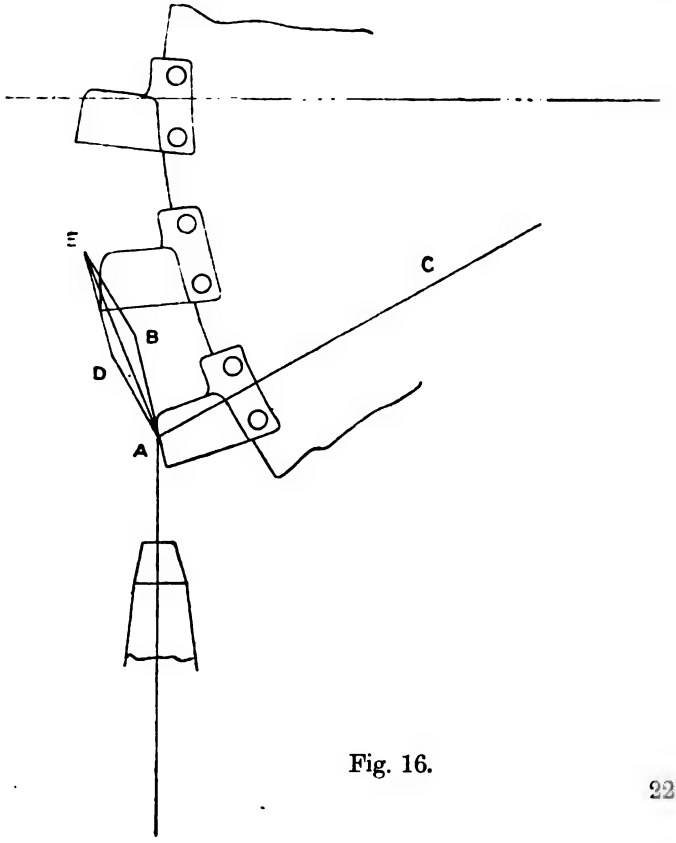

Fig. 16.

Mr C. A. Matthey.
follow the line of the outside of the bucket, which, when produced, would cut both No. 2 and No. 3 positions; but when the compound motion was taken into account, the resulting path of the deflected water was almost, if not quite, outside No. 2 bucket. The path was found as follows:—A B represented the line of the outside of bucket produced; A C a radius; and A D was at right angles to A C, and was made equal to the speed of the bucket, and A B equal to the difference of speeds of water and bucket, which was the speed of water relative to the bucket. If the parallelogram A D E B were complete the diagonal A E represented the actual motion in space of the water. Although this line came within No. 2 bucket, it did not follow that the water entered the bucket; for consider a particle of water leaving the point A and proceeding along AE; when it reached the place where No. 2 bucket was, when the particle started from A, that bucket had moved further round, and so escaped the water. Mr Houston said that the design of the wheel did not enter into the scope of his paper But before generalising on this class of turbine, he should at least take a wheel for experiment which embodied all that was at present known of the necessary conditions. He (Mr Matthey) thought that the above considerations would to a large extent, if not entirely, account for the very poor performance of the wheel in question, and felt sure that if Mr Houston would fit a new set of carefully designed buckets, he would get a far superior result with the high pressures he used; he should not rest content with a less efficiency than 75 per cent.

Mr WILLIAM ALEXANDER pointed out that in the expressions:—"pressure on the brake balance," "pressure is reduced when," "pressure is reduced because," on page 283, *force* would be a less confusing and more correct word to use than *pressure*, as pressure was used on the same page in speaking of the pressure in the nozzle, pressure in this case meaning force per unit area. On page 278, it was stated that, "the water used per horse power per hour, and consequently the cost, vary inversely as the water pressure." The cost would only vary in this manner if water at different pres-

sures cost the same. Usually, water of 1000 lbs pressure would be more expensive than water at 200 lbs pressure. The value, ·36, mentioned on page 280, would only be of use in designing Pelton wheels with other shapes of buckets than that experimented with, if this value were independent of the losses in the buckets, and therefore of the shape of the buckets. To determine this a set of experiments would require to be made on a wheel with buckets of a different shape. The assumption made at the top of page 282 seemed to be a slip in judgment. To assume that the shaft friction was practically a constant at all speeds was tantamount to assuming solid friction, the law for which never held in any lubricated machine. The author, after quoting Tower's result (friction $\propto v^{\frac{1}{2}}$), and also the result for high speeds, (friction $\propto v^2$), meant to assume, it seemed, that the friction varied as v for the shaft friction of the Pelton wheel. It was true that with varying loads the friction of many steam engines was a constant, but the speed in such cases was practically a constant. It was never true that the friction was a constant at different speeds for a lubricated bearing or machine. It would be seen that the figures 22·8, on page 283, did not represent the per centage loss of jet energy, but rather the percentage loss of momentum due to cause (a). Or, it would represent the percentage that the work done by the actual wheel would be less than the work done by a similar frictionless and shockless wheel, both moving with the same infinitesimally small velocity. On page 284, it was assumed, in calculating the residual energy, that k was constant for different speeds of water relatively to the bucket; an assumption that *could not* be made, for k depended on the friction of the water against the bucket surfaces, which friction was pro portional to the velocity squared. The various losses would not "decrease slightly," but very much with increase of speed, and it would be wrong to assume them constant, as was done in Table III. The losses (a) and (b) could not be differentiated by the author's method; from the experiments made, one would have to be content with finding the slump of the losses due to water friction and shock. Producing the curves of Fig. 5 back to the

Mr William Alexander.

origin was a proceeding that might lead to quite different results with different people. It would have been advisable to show on the different curves the points representing each experiment, as it was often a matter of opinion how a curve should lie between the points. The paper contained a great deal of new information, which was bound to be of value to those studying water motors. Mr Houston, therefore, deserved much credit for the time and trouble he had expended in making the elaborate series of experiments, and preparing such an interesting paper.

Dr. J. B. HENDERSON (Member) remarked that the author had carried out a number of valuable experiments, and a full account of these giving the complete experimental results would have made a valuable paper for future reference, Unfortunately Mr Houston had not given his experimental results in detail—he had only given a series of mean values with no indication as to the accuracy of these values, and he had added an analysis of the losses to which he (Dr. Henderson) feared great exception could be taken. The advice of the late Professor Kundt of Berlin to his students was safe for experimenters to follow. A translation of it would read:—"We mustn't spoil our beautiful experiments by any theorising," and Professor Kundt was always careful to do any theorising in a separate paper from the account of the experiments, because, he said, if one made a mistake in theorising he got no credit afterwards for the experiments. With regard to the accuracy of Mr Houston's experiments, the figures were given in some parts as if the limits of accuracy were of the order of 10 per cent., while in other parts they were given as if that order were 0·1 per cent. Examples of both could be found in Table I. Mr Houston calculated the energy of the jet from the mean velocity which he had determined experimentally. This energy would only be the true value if the velocity of the jet was the same at all parts, since the energy varied as the square of the velocity and not as the velocity simply. In the orifices used the distribution of the velocity might approximate to that of the steady flow of water in a pipe, at any rate the conditions would

be somewhere between that extreme and the other assumed by the author, and the smaller the orifice the more nearly would the conditions approximate to the pipe conditions. The distribution of velocity across the section of a pipe when the motion was steady was represented by a paraboloid of revolution having the axis of the pipe as its main axis, and in such a case the energy of flow would be given by $\frac{4}{3}$ × (mean velocity)^2, that was, it would be $\frac{1}{3}$ greater than the value calculable from the mean velocity. Adding $\frac{1}{3}$ to the values of c^2 in Table I. the values for the three nozzles respectively, starting with the smallest, would be 0·94, 1·06, and 1·22. These numbers showed that although the conditions were not those of steady flow in a pipe, they were approximating to those conditions in the smallest nozzle. In the other jets there would be a core of water flowing with the full theoretical velocity. The values of jet energy given in the paper were to be looked upon as minimum values, and the true values might be 10 or 20 per cent. higher according to the nozzle used. It would have added greatly to the value of the paper if the author had given the points from which the curves were determined. The curve on Fig. 6 did not seem to agree with the figures in Table II., and one would judge from the first paragraph on page 280, that it was intended to represent these values but perhaps some other efficiency was referred to. In Fig. 8 the curve giving the couple ought to pass through the origin if the axle were oil borne at all speeds, say if there had been pressure lubrication; and from the fact that it did not pass through the origin it might be concluded that there was metal to metal friction at the low speeds. The presence of the speed counter might account for a good part of the metallic friction. He thought Mr Houston had got a little mixed in his units in the formula, on page 281, for the moment of inertia, where he had $I = \frac{wk^2}{32{\cdot}2} = 0{\cdot}027$ lbs. × ft.^{2} The moment of inertia by definition was Mk^2, which might be written $\frac{Mgk^2}{g} = \frac{Wk^2}{g}$ the author's expression. But if

this form were employed, then in substituting numerical values W must be substituted in poundals and not in lbs. weight (as seems to have been done) in order to give the result in lbs. × ft.² But why introduce "g" at all into a moment of inertia which could have nothing to do with gravity? M and k were both known and might be substituted directly. The "g" introduced by Mr Houston should have been introduced later in determining the couple L, but none was introduced there, so the results for the couple and consequently the horse-power were correctly calculated. According to the pre-Gaussian system of units now being extolled by Professor Perry, the equations would be correct if instead of lbs. × ft.², pre-Gaussian units of mass × ft.² were written. In trying to separate the losses at the wheel he feared the author had gone astray. With regard to the energy lost in the cups, the jet was assumed to approach the cup at a velocity V and to leave it at a velocity k V, and the experimental measurement of the statical couple due to the jet enabled k to be determined. The loss of energy in the jet was then surely given by $V^2(1-k^2)$, which in the example of the stationary wheel amounted to 79 per cent. of the energy of the jet. If this method were to be applied to the moving turbine, then for V the differential velocity of jet and cups must be taken, but before that could be done the statical experiment of page 282 would have to be repeated for a large number of different velocities of jets. Mr Houston's method of calculating the energy lost in the cups, in which he took the difference of the measured couple and the theoretical couple supposing the water velocity to remain uniform throughout, would only be applicable if the forces causing a diminution in the velocity of the water (cup friction, etc.) acted only in the direction of rotation, which, of course, was not the case. The friction at the bottom of the cups, for instance, acted parallel to the shaft, and the difference between the theoretical force and the force measured in the statical experiment was only one component of the cup friction and of the other forces tending to diminish the velocity. In producing the curves in Figs. 4 and 5 it was true that the

curves in Fig. 5 must all pass through the origin, but it would be evident that one could place no weight on the produced portions of the curves, especially near the origin in Fig. 5 and near the vertical axis in Fig. 4. He united with others who took part in the discussion, in thanking Mr Houston for bringing this suggestive paper before the Institution, but regretted that the author had not confined the paper to a thorough description of the experiments.

Mr Houston, in reply to the points raised by Mr Matthey, observed that in every case it was found that the maximum efficiency occurred when the velocity of the wheel was about 0·52 of its velocity when running without load. In his work on Hydraulics, Bodmer stated that, "The efficiency of a turbine was greatest for a velocity somewhat in excess of half that at which the wheel would run without a load." For a perfect wheel, having no losses due to shaft friction, fan action, and shocks, the velocity of the cups must not exceed half the velocity of the jet for maximum efficiency, and as the above losses tended to reduce the speed of cups for maximum efficiency, it might be taken that for Pelton wheels in general the value obtained from the experiments was not very far from being correct. The curve of efficiency, Fig. 6, was symmetrical, as the losses varied at different speeds. He agreed with Mr Matthey concerning the defective design of the cups used in the experiments, but only one type of cup was available, therefore comparative results were not possible. There seemed to be various opinions regarding the best type of cup for Pelton wheels, and the efficiencies stated by the different American makers required to be accepted with caution. Mr Matthey's remarks with respect to the action of the jet on the cups was very instructive and worthy of consideration. The maximum efficiency of 52 per cent. was certainly low, but the Pelton wheel experimented upon was only a small one. Replying to Dr. Henderson, he did not think there could be any appreciable error in taking the average velocity of jet as stated in the paper, especially as such high pressures were used. Regarding the method of obtaining the percentage loss due to the splitting action of the cups on the jet, and cup of

Mr Houston.

friction, he should have stated that taking a perfectly frictionless and shockless wheel as giving an efficiency of 100 per cent., the work done by the actual wheel showed a loss of 22·8 per cent. due to these causes. He agreed with Mr Alexander that it would be better to substitute the word *force* for *pressure*. Referring to the shaft friction, the linear velocity was not great, as the shaft was only 1 inch in diameter. From experiments conducted by the author on a De Laval steam turbine working in various mediums, he was led to believe that at the higher speeds of the Pelton wheel the chief cause of resistance was due to fan action. He was aware that the energy utilized in shock in splitting jet and in cup friction, was slightly variable with varying speeds, but the variation was not very serious. Both Mr Alexander and Dr. Henderson took objection to the accuracy of the method employed in obtaining the energy utilized in shock due to cups cutting jet. The results were obtained from carefully drawn curves, plotted from a large number of experiments, and he believed the results were fairly accurate.

THE OLD QUAY WALLS OF GLASGOW HARBOUR.

By Mr W. M. Alston (Member of Council).

Read 21st April, 1903.

(SEE PLATES XIII., XIV., XV., XVI., XVII., XVIII., XIX., XX.)

Having been asked to contribute a paper on "The Old Quay Walls of Glasgow Harbour," I have pleasure in doing so in the hope that it may prove interesting to the Members of the Institution.

The subject is one which directly concerns the civil engineer, but as the purpose of a quay wall is to accommodate a ship, which is the joint product of the labour of the shipbuilder and the mechanical engineer, it may fairly be expected that the subject will not be without interest also to those members who come under these two designations.

Of necessity the paper must be historical and descriptive; and it is not one which will lend itself to much, if any, discussion.

Its preparation has involved tedious search over a long series of years, in many cases only to find that much information in the way of plans and documents had disappeared or, at any rate, was not to be discovered, and on this account it is to be regretted that the paper cannot be so complete as it was desired to be.

When possible the costs of the quays are given; but the figures, it need hardly be stated, have little relation to present day prices.

In former times the trade of the port of Glasgow, such as it was, was carried on by open boats, and this state of affairs is referred to by Thomas Tucker, one of Cromwell's Excise Commissioners, who, visiting Glasgow in the year 1656, reported that the citizens possessed twelve vessels ranging from 12 to 150 tons burden, but owing to the shallowness of the river, vessels of any size could not

get within 14 miles of the city, timber being floated up in rafts, while goods were brought up by small cobbles or boats of 3 to 6 tons burden; in all probability, these boats lay in the stream at Glasgow or were grounded on the sloping river bank.

It is not until six years after the date of Tucker's report, viz., in 1662, that a quay wall is first heard of.

In that year the magistrates decided that, "for the more commodious lading and landing of boats, there will be ane little key builded at the Broomielaw."

In the following year they ordered that the quay should be made two stones higher, and recommended "the Deane of Gild to try for more oaken timber, either in the Hie Kirk or back Galrie—for facing the saym."

This sacrilegious advice shows what little regard the worthy magistrates must have had for their beautiful cathedral.

No further reference is found to quays until the year 1715, when the magistrates were empowered to build one from the Broomielaw to the Ducket Green, the latter place forming a portion of the north river bank lying eastward of Jamaica Street.

On referring to the pages of John M'Ure, the garrulous old historian of Glasgow, the first description of the old quay walls is found. Writing in 1736 he described what he calls the "Bremmylaw" in the following quaint and extravagant language:—

> "There is not such a fresh water harbour to be seen in any place in Britain, it is strangely fenced with beams of oak, fastened with iron batts within the wall thereof, that the great boards of ice in time of thaw may not offend it, and it is so large that a regiment of Horse may be exercised thereon."

In 1759 the first Act of Parliament was obtained by the magistrates for the improvement of the river, its chief object being to carry out Smeaton's proposal to build a weir and lock at Marlinford, about four miles down the river, so that vessels about 70 feet long, and drawing 4½ feet, might get up to Glasgow. The Act

also provided for continuing and repairing "the Key of Glasgow," and making it more commodious.

Their second Act, in 1770, was the first one providing for the deepening of the river, the depth then aimed at being the very modest amount of only 7 feet at high water of neap tides.

Standing on the threshold of the improvement of the navigation, the city fathers must have had some dim vision of the future possibilities of their port, for we find them at once asking for power to extend the Broomielaw, and in addition to build a key opposite to it on the south bank, but further on it will be seen that this dream of a south side quay was not realized until 58 years later.

By the year 1792 the harbour of Glasgow embraced a water area of only about 2½ acres, and a quay 262 yards in length extending from the bridge built at Jamaica Street in 1772 down to Robertson Street.

In that year an extension was carried westwards to York Street, a distance of 120 yards, so that by the end of 1792 there was a total quayage of 382 yards, and the water area was enlarged to about 4 acres.

Fig. 1 is a comparative plan of the river in the years 1800, 1825, 1840, and 1858, and it shows the extent of the harbour and quay accommodation just referred to.

The improvement of the navigation has been effected by a gradual process extending over a long series of years, and it may be assumed that the engineers of the day would be found adapting their works to suit the successive increases of depth in the river authorised by the Legislature. In this way the growing dimensions of the quay walls should be found keeping pace with the improvement of the river and the development of trade.

The first period of improvement was covered by the Act of 1770, already referred to, under which the depth of 7 feet was authorised, but no records can be discovered of works carried out during its currency.

The second period began with the Act of 1809, by which the magistrates were constituted trustees for carrying on the affairs of

the navigation, and powers were given to them to deepen the river to 9 feet at high water of neap tides. Under this Act the quayage could be extended on both sides of the river from Jamaica Street bridge on the east to a line drawn parallel to the west side of Clyde Street, in the *village of Anderston*, on the west.

Fig. 2 shows the quay wall, 315 yards in length, from York Street ferry stair to Royalty burn, a point nearly midway between M'Alpine Street and Washington Street, from a design and specification supplied by the distinguished engineer, John Rennie, then consulting engineer to the Trustees. The specification, which is carefully drawn up, is dated 1809, but the wall was not constructed until the years 1811-12-13. The cost cannot be ascertained. The work was specified to be done within a cofferdam.

The foundation consisted of a row of tongued and grooved sheet piles, from 8 to 10 feet in length by 6 inches in thickness, driven in direction of the tangent from the curved face of the wall. At the back of these piles, at the top, was spiked a sill 12 inches by 8 inches, and behind this sill were other two sills of the same dimensions laid flatwise, one being under the back of the wall and the other under the counterforts. These sills were solidly bedded on the ground on a line radiating from the centre of curve of face. The spaces between the sills were well packed with gravel, and the surface for commencing the masonry of wall and counterforts was formed with planking, spiked down to the sills.

The wall and counterforts were built with courses of solid ashlar, laid with radiating joints. For three inches in from the face the masonry was jointed with Parker's Roman cement. This cement was used also for bedding some of the lower courses for a certain distance inwards, while for the upper portions a cement was used made of one part of well burned pounded or ground lime, one part of burnt ironstone, pounded, and two parts of clean river sand, the lime being burned adjoining the work and used hot. The back portions of masonry were laid in mortar made with lime from Netherwood, Campsie, or Kilbride Quarries.

The wall was only 18 feet in height from foundation to coping,

and the face had a curved batter drawn with a radius of 50 feet, the centre being on the same level as the top of the cope. Its thickness was 5 feet at the bottom and 4 feet at the top, and counterforts 4 feet thick by 5 feet broad, were placed 18 feet apart.

The original drawings for this wall not being procurable, it is not known what depth of water Rennie intended should be provided by the wall, but assuming that it was the depth of 9 feet at high water of neap tides authorised by Act of 1809, the intended bottom would probably be about the level of the top of the sheet piles. The section now given was prepared in 1855, and the tide levels and bed of river are those applicable to that time. Very likely the design was that the foundation should be under the intended bed of river, a principle which it will be seen was soon departed from, and not reverted to until many years afterwards.

The early quay walls have had a chequered history, and neither time nor space will permit of their vicissitudes being followed in detail, so that as each wall is dealt with its subsequent history must only be lightly referred to.

Several portions of this wall gave way, the first, about 20 feet in length, opposite Carrick Street, was repaired in 1833; the second portion, immediately to the west of Carrick Street was piled and planked over about 1842; while a third portion, 180 feet in length, westward of York Street Ferry stair, had to be rebuilt in 1842. Reconstructions of other parts followed in 1859, 1864, 1883, 1889, 1902, and at the present time a length of about 131 yards of reconstructed work is being renewed between James Watt Street and Carrick Street. In connection with this latter operation, an interesting link with the past is the fact that some of the ashlar foundation stones of the old wall are now being lifted by the diver to clear the ground for the new work.

The introduction of steam navigation in 1812 did much to increase the desire for the improvement of the navigation, and aspirations in this direction were greatly promoted by the adoption of the steam dredging machine in 1824.

At the close of this period the quayage had risen to 865 yards and the water area to 9 acres. See Fig. 1, showing the harbour in 1825.

The Trustees now entered on their third period of improvement by procuring the Act of 1825, which gave them power to deepen the river to 13 feet at neap tides, and to extend the harbour to a point now known as Hydepark recess, on the north side of the river, and to the mouth of the Kinninghouse burn on the south side. The same Act authorised the construction of quays on both sides of the river from Stockwell Street bridge to Saltmarket Street, but this power was allowed to lapse.

Under this period six walls were built, the first being that for the reconstruction of the old quay from Jamaica Street bridge to the ferry stair, opposite York Street, referred to in the beginning of the paper as forming the whole extent of the quayage in 1792, a length of 375 yards. This work was executed in the years 1828-29 according to Fig. 3. The wall was founded on piling, at a level about 4½ feet higher than in the previous case.

The foundations consisted of sheet piling 11 feet long by 6 inches thick along the front, and three rows of bearing piles behind 14 feet long, with the usual sills and planking for the masonry to be bedded upon. The wall, built of solid ashlar courses, was only 13 feet high, 6 feet thick at the bottom, and 4 feet at the top, and counterforts, 6 feet deep backwards, were placed 12 feet apart. In this case the face of the wall had a straight batter. Its cost cannot be ascertained.

Three years after completion, viz., in 1832, about 120 feet of this wall, opposite Robertson Street, failed, and had to be rebuilt. In later years various reconstructions were effected, and now no part of the wall remains.

As in the former case, the original drawings are lost, and the tide levels and bottom of river are those appearing on a drawing made in 1855.

This is the first of the series of walls founded at a high level on bearing and sheet piles, all of which walls failed in a similar

manner, the material under the wall getting washed out through defective joints in the sheet piling, especially after the bed of the river came to be dredged deeper, leaving the masonry standing on stilts.

The next, Fig. 4, represents Anderston quay wall from Clyde Street ferry to Hydepark recess, a distance of 249 yards. This wall was built during the years 1827 to 1831, and is similar in section to Fig. 3, the only difference being that the sheet and bearing piles are a little longer. The cost of the wall was £32 per lineal yard.

It is not known who prepared the designs for these two walls, but they received the approval of Thomas Telford, the Trustees' consulting engineer.

In 1859 the last mentioned wall had to be protected by sheet and fender piles. In 1899 a portion of this strengthened work fell into the river, and was rebuilt; at the same time the remainder of the wall was repiled with sheet piles, the superstructure faced with concrete, and the whole secured with long tie rods.

Fig. 5 is the drawing of the wall from Royalty burn to Clyde Street ferry, a distance of 168 yards, built in 1832 from a design by Mr Charles Atherton, the first resident engineer on the navigation. It stands on three rows of home grown round timber piles, the front row being driven close together after the manner of sheet piling. It was 15 feet in height, 8 feet thick at the bottom, and 6 feet at the top, the coping being 4 feet broad. The wall was founded about 2 feet lower than in the case of the preceding wall. The cost cannot be ascertained.

In 1860 the wall had to be strengthened with sheet piles and tie rods, and in this condition it remains.

It is now necessary to pass to the south side of the river.

The first accommodation provided on this side was a temporary timber wharf constructed in 1828 along the margin of the unwidened stream, and only 180 feet distant from the Broomielaw quay. This structure need not be dwelt upon, but in Fig. 6 is seen the section of the wall for Clyde Place quay, extending from

Jamaica Street bridge to West Street, a distance of 405 yards, on a new line about 400 feet off the Broomielaw.

This wall was also designed by Mr Atherton, and it received the approval of Mr Jesse Hartley, the engineer for the Liverpool docks. Building was commenced in 1833 and completed in 1837. The section is similar to Mr Atherton's other design, Fig. 5. The masonry was 20 feet in height, or 5 feet more than the last, due to the wall being founded 2 feet 10 inches lower, and carried to a higher level by 2 feet 2 inches. But although the height was increased, the thickness at the bottom was kept at 8 feet, the same as before. The piled foundations were improved, consisting as they did of three rows of bearing piles, and close-jointed sheet piles in front, of square timbers 12 inches thick, instead of round timber, and all the piles were made longer. The cost of the wall was £42—10s per lineal yard.

The vicissitudes of this wall alone would provide material for a separate paper.

Two years after completion, viz., in 1839, the portion opposite Dale Street had to be rebuilt. In 1847 part of the wall opposite West Street was taken down and wharfed over. In 1848, the part from Bridge Street to Centre Street was secured by long land ties, and the part from Centre Street to Dale Street was tied back with chains.

Subsequently other repairs and reconstructions occurred which cannot be ennumerated; suffice it to say, that of the original length of 405 yards of wall, only 220 yards remain, extending from the bridge downwards, this being the part secured by land ties in 1848, but in addition to that it was in 1867 strengthened with long sheet and fender piles.

In continuation of this wall, Windmillcroft quay was completed in 1838, the wall stretching from West Street to a point where the entrance to Kingston Dock now is, a distance of 335 yards. See Fig. 7. In this design by Mr Logan, who succeeded Mr Atherton, the piled foundations are substantially the same as those of the ast wall, and the masonry is the same height, but 1 foot 6 inches

thicker at the bottom, and a return is made to the curved battering face. The wall cost £45 per lineal yard.

In 1848 the eastern portion of this wall had to be reconstructed, and the remainder was secured with tie rods. In 1884 the whole of the wall had again to be strengthened by means of sheet piles and ties.

Keeping to chronological order, a return must now be made to the north side of the river.

Fig. 8 is the section of Hydepark quay, 126 yards in length, from Hydepark recess westwards to what was Mr Robert Napier's fitting out basin or dock. This wall was also designed by Mr Logan, and it will be seen that it is similar to Windmillcroft quay, the only difference being increased thickness of the masonry at the bottom. The wall was constructed in the years 1838-9-40 at a cost of £56 per lineal yard.

In 1885 the wall gave way, and its place was taken by substantial timber wharfing erected on a new line.

At the close of this period the quayage of the harbour had risen to 1,973 lineal yards, and the water area to 23 acres.

Between 1830 and 1840 trade and shipping increased so rapidly that the Trustees felt justified in going forward with a scheme for a very large addition to the harbour.

Accordingly, under the advice of Mr James Walker, who succeeded Telford as consulting engineer, they obtained powers in 1840 to construct 1,233 lineal yards of quays on the north side, including the reconstruction of Anderston quay on a new line, which, however, was never accomplished, and 1,288 yards on the south side of the harbour. In addition, the formation of a dock on the lands of Windmillcroft, with 820 yards of quays and about 7 acres of water, was authorised, but not carried out until a time later than the period embraced by this paper.

Under this Act, which inaugurated the fourth period of improvement, the depth throughout the harbour and river was to be made at least 17 feet at high water of neap tides, or about 10 feet at low water. See Fig. 1, showing the harbour as it was in 1840.

In accordance with these new conditions, the first wall built was Lancefield quay on the north side of the river, commencing on the west side of Mr Napier's basin and extending westwards for a length of 185 yards. This wall was constructed in 1843-44 from a design by Mr Wm. Bald, successor to Mr Logan, as resident engineer. See Fig. 9.

In every way this is a heavier wall than the last. The masonry was carried 1 foot 3 inches lower, making the height 21 feet 3 inches, and the breadth of base was 11 feet, or 1 foot greater; while in addition the wall was provided with counterforts at the back 5½ feet in depth by 6 feet thick, placed 12 feet apart. The wall proper was founded on sheet piles along the front, 26 feet long by 12 inches thick, and on three rows of bearing piles 24 to 25 feet in length, while the counterforts were carried on two rows of bearing piles 18 feet in length. It will be observed in this design that the proposed bottom of river was to be 5 feet below the bottom of masonry.

In continuation of this wall came Finnieston quay, opposite the village of Finnieston, completed in 1848, 297 yards in length, and terminating at Stobcross slip dock and shipbuilding yard. This wall, see Fig. 10, made a considerable advance on previous designs.

For the first time the piled foundations were enclosed between two rows of sheet piles, one at the front and one at the back, each 15 feet long by 6 inches thick. Between these two rows were driven five rows of bearing piles, each 17 feet long by 12 inches square, spaced 3 feet apart from centre to centre longitudinally. The void space between and under the sills and sleepers was filled up solid with concrete 18 inches in depth, composed of 7 parts of quarry chips and gravel to 1 of lime. The masonry was 24 feet 2 inches in height, 14 feet thick at the bottom, and 8 feet at the top under cope, and the curved battering face was drawn with a radius of 66 feet 3 inches. It was laid in lime mortar, and the facing joints for 2 inches in depth were pointed with cement from the Giffnock district; the lime was to be from Lord Elgin's works, or from Corrie, in Arran, or from Mr Dunn's works, presumably at Dunlocher.

The system of building with solid ashlar courses was continued, and to give an idea of the moderate cost of work 57 years ago, it may be mentioned that the price of the freestone ashlar for facing the wall was only one shilling per cubic foot, the large blocks behind the facing cost only tenpence per cubic foot, and the cost of the wall complete was about £64 per lineal yard.

The engineer was Mr David Bremner, successor to Mr Bald in the resident engineership.

Both Lancefield and Finnieston quays remain, but in 1886 it became necessary to secure them with sheet piling and tie rods.

The next wall in order is Springfield quay on the south side. This wall, 772 yards in length, was constructed between the years 1847 and 1850, and extended from what is now Kingston dock entrance to the Shiels burn. The design was prepared by Mr Bremner. This wall, like the preceding two, was designed for what was called the Parliamentary depth of river, viz., 27 feet 3 inches below the cope level, and it is interesting as being the first wall to have its foundations placed below the intended level of the bottom of the river.

Two designs were prepared, one without bearing piles for places where the sand was firm; and the other with bearing piles where the sand might be found to be soft and running.

Mr Walker was opposed to the use of bearing piles, holding that they were unnecessary where foundations could be placed low enough to be beyond the reach of disturbance, and that dispensing with them effected a saving both in time and cost. In this case his opinion prevailed, and the wall was constructed without bearing piles. After the trench was excavated, two rows of sheet piles, each 15 feet long by 6 inches thick, were driven, their heads being at a level of 7¼ feet below low water. The material between the sheet piles was then removed for a depth of about 3½ feet, and after five lines of longitudinal planks 12 inches by 3 inches were bedded on the sand, concrete was put in between the planks, and on this foundation the masonry was commenced. The total height of the masonry was 28 feet 8

inches, and the thickness of the wall was 14 feet 6 inches at the bottom and 8 feet 9 inches at the top; the face had a curved batter drawn with a radius of 93 feet. Like all the previous walls the masonry consisted of solid ashlar courses. The cost was £78 per lineal yard.

In 1855, about 206 feet in length of this wall failed owing to operations connected with the construction of the adjoining quay, Mavisbank, by water getting behind the wall and forcing it forward. This length was rebuilt on bearing piles according to one of the sections for Mavisbank quay, Fig. 14. In 1883, this wall, like so many of its predecessors, had to be protected by sheet piling along the front, and was tied back with rods.

The bridge built in 1772 at Jamaica Street having had its foundations laid at a high level, a weir of rough stones was constructed some time in the latter part of the 18th century, below the bridge, to preserve its foundations from being undermined by the deepening of the river. This weir is shown in Fig. 1, on the portion of the plan applicable to the year 1800, and it remained a barrier to navigation of any importance until 1842 when it was removed to a new site, below the bridge at Stockwell Street, and only then did it become possible to develop that portion of the river between the bridges, called the Upper harbour. This development was confined to the north side, the quay being called the Custom House quay.

The Upper harbour being accessible to only small vessels capable of passing under the bridge, the wall was designed of a lighter character than those in the Lower harbour. Fig. 12 is the section of the middle portion of this quay eastward of the Suspension bridge, 183⅓ yards in length; the quay was designed to afford an ultimate depth of 6 feet at low water, and it was completed in 1852.

In carrying out this work after cutting a trench to 1 foot below low water, two rows of sheet piles 6 inches thick were driven, the front 16 feet and the back 14 feet long, the heads of the front piles being 14½ feet below the cope level. These rows of sheet piles

were bound in line by a wrought iron wale on the face of the front piles and a timber wale 12 inches by 6 inches on the back of the back piles, and both rows were tied together by rods 7 feet apart. Within this sheet pile casing, the excavation was taken out for a further depth of 5 feet, or 7½ feet below the top of the front piles, and the masonry then founded on the sand. For the first 5 feet in height the masonry was rubble work, followed by an ashlar tie course 15 inches thick, and the remainder of the building was done with ashlar facing and rubble backing.

The face of the wall had a straight batter. The total height of the masonry was 22 feet, with a thickness of 8 feet 9 inches at the bottom, and 5 feet 9 inches at the top.

At a distance of 19 feet behind the quay wall was a continuous rubble wall 5 feet broad by 6 feet in height, and to this anchorage the quay wall was tied by rods 30¾ feet long, placed 7 feet apart. Along the back of the quay wall was formed a dry stone drain to discharge the land water by cast iron pipes placed in the wall at intervals at the level of the top of the front piles. In this wall it will be noted that rubble masonry is used for the first time. The cost was £29 10s per lineal yard.

The portion of quay westward from the Suspension bridge towards Jamaica Street bridge, 136⅝ yards in length was completed in 1855. The section of this wall was similar to the foregoing, but considerably heavier, Fig. 13, and like the previous one it was designed for a prospective depth of only 6 feet at low water. In this case the sheet piles were made 12 inches thick, and the lengths increased to 20 feet at the front and 17¾ feet at the back. The top of the front sheet piles was kept at the same height, as in the former section, but the excavation between the sheet piling was taken out to 11 feet below the top of the front sheet piles, or 3½ feet lower.

By this time Mr John F. Ure, best known in after years for his labours and great success in the improvement of the river Tyne, was resident engineer. Between him and Mr Walker a sharp conflict of opinion existed on the question of bearing piles, Mr Ure

holding that they were necessary, and Mr Walker taking the opposite view. Mr Ure's ideas were carried, and accordingly between the sheet piles, four rows of bearing piles were added; these were driven from the level of the top to the sheet piles, but were cut off at 10½ feet below the same level to receive cross sills and longitudinal sleepers. The ground was then excavated for a depth of 1 foot below cut of piles, and concrete was put in finishing off at the surface of the sills. The masonry commenced with an ashlar found course on top of longitudinal sills, then rubble masonry followed to the top of the sheet piles and the superstructure consisted of ashlar facing with rubble masonry backing. From the bottom of found to the top of wall the height was 27 feet.

At the back of the wall a rubble drain was formed to collect the land water which was discharged through the wall by cast iron pipes placed at intervals. The cost of this piece of wall was £54 per lineal yard.

For the construction of the eastern portion of this wall, 155 feet in length, up to Victoria bridge, practically the same section as the foregoing was adopted, Fig. 13. This part of the wall was compleled in 1857 at a cost of £65 per lineal yard.

These three sections of wall have not stood well, owing to the gradual increase of depth of water to about 10 feet at low water, in place of the prospective depth of 6 feet.

In 1867 a length of 180 feet of the central section, Fig. 12, fell in and required to be rebuilt. In 1890-91 the stronger section, Fig. 13, from Glasgow bridge to the Suspension bridge had to be partly taken down and strengthened with sheet piling and tie rods, and in 1897 it became necessary to treat the remainder of the quay, between the central portion and Victoria bridge, in the same manner.

The last wall to be dealt with is now reached, viz, Mavisbank quay, extending for 516 yards from Shiels burn where Springfield quay terminated to the Western boundary of the lands of Mavisbank, opposite Stobcross slip dock, on the north side of the river.

The contract for building this wall was entered into in 1855 or

48 years ago. The drawings were prepared by Mr Walker, in accordance with his principle already referred to. The wall was designed to give 12 feet at low water, or 2 feet additional to the previous walls, and was to be founded between two rows of sheet piles on longitudinal sills, bedded in the sand, at a depth of 17 feet below low water, or 5 feet below the intended bottom so that the foundation might be safe from disturbance.

Subsequently, however, owing to the failure of 206 feet in length of Springfield quay adjoining, Fig. 13, the design was reconsidered, and through the intervention of Mr Ure, it was decided to rebuild the portion of Springfield quay on bearing piles, and continue Mavisbank quay on the same section, except where boulder clay could be reached.

At the same time the Trustees, becoming fully alive to the rapidly increasing size and draught of vessels, decided to found both walls at lower levels. The section for rebuilding Springfield quay and the eastern 945 feet of Mavisbank quay is shown on Fig. 14.

The wall was put in by cutting a trench to about 10 feet below the low water level, then forming a casing with sheet piling 17 feet long and 6 inches thick. Inside this casing the excavation was removed for a further depth of 7 feet. The next step was to drive a row of square bearing piles 14 feet in length and 3 feet apart from centre to centre along the inside of the back and front sheeting, after which three rows of round bearing piles of the same length as the square ones, and at the same distance apart longitudinally, were added. The bearing piles being then cut to level, cross and longitudinal sills were spiked down upon their tops. The excavated space between the sheet piles was then filled up with concrete for a depth of 3 feet to the level of the top of longitudinal sills, and on this surface the ashlar found course was laid. The total depth of this section from the bottom of concrete to the top of the cope is 34 feet 6 inches, the width at the bottom between the sheet piles is 15 feet 3 inches, and 8 feet 9 inches at the top. This section was intended to afford a berthing depth in front of about 16 feet at low water.

Fig. 15 is the section of the wall for the central 400 feet of Mavisbank quay on boulder clay. The foundation consists of a bed of concrete 17 feet broad by 3 feet thick, and on this concrete the masonry commenced with an ashlar course 16 feet broad by 2 feet in depth. The total height of the wall from the bottom of concrete to cope is 41 feet 6 inches. The wall was designed to give 20 feet depth at low water, and the foundation on the boulder clay was placed 4 feet below the intended bottom of the river.

The next section, Fig. 16, applies to the western portion of Mavisbank quay, 203 feet in length. It is similar to that represented by Fig. 14, and was carried out in a like manner, the salient differences being that the front sheet piling was made 20 feet in length by 10 inches in thickness, while the back sheeting became 18 feet in length by 8 inches in thickness, and the excavation within the casing of sheet piles was taken out to 20 feet below low water. With these alterations, the total height of the wall from the underside of concrete found to the cope, was 3 feet greater, or 37½ feet. The thickness of wall at the bottom is 16 feet, and at the top 8 feet 9 inches. This section, like the precednig one, was intended to give a berthing depth of 20 feet at low water.

In these three sections it will be noted that following the departure initiated at the Custom House quay, rubble masonry was used for backing in place of solid ashlar as of old.

This wall was completed in 1858, by which time the quayage of the harbour consisted of the walls passed under review amounting in all to 4,248 lineal yards, and 128 yards of wharfing at Stobcross for the accommodation of the timber trade, which it is not necessary to deal with, making in all 4,376 lineal yards, and the water area had increased to 70 acres. See Fig. 1.

With regard to the failures of the quay walls, as already hinted, an account of them and of their repair or renewal, would carry this paper far beyond reasonable limits. To a small extent the failures were due to badness of foundations, and chiefly to the fact that by the progressive deepening of the river the walls became gradually undermined.

This lowering of the bed of the river is well illustrated by the historical longitudinal section of the harbour, Fig. 17, which shows, taking as a point for comparison the site of the Hirst shoal, about the line of York Street ferry, that from 1755 to 1806 the lowering of the bed was about 7 feet 6 inches, from 1806 to 1824 it was about 2 feet, from 1824 to 1839 it was 4 feet 3 inches, and from 1839 to 1853 it was 4 feet 3 inches, making a total of 18 feet between 1755 and 1853, or, taking the period more immediately under review, from 1806 to 1853 the lowering was about 10 feet 6 inches. With such a factor at work it is not surprising that failures were brought about in the manner indicated.

It must also be borne in mind that the walls, being on a tidal stream, are subjected to more serious strains than if they were in enclosed docks where the impounded water affords direct support.

Before closing, it may be advantageous to bring out in relief some of the chief points of interest arising from this survey of the old quay walls and the harbour of Glasgow.

In the beginning of 1792 the harbour possessed only 262 yards of quays and 2½ acres of water, by 1858 the quayage had increased to 4,376 yards, and the water area to 70 acres.

The wall designed in 1809 was to give a depth of 9 feet at high water of neap tides, it was only 18 feet in height and had a mean sectional area of 97 square feet. The wall completed in 1858 gave 28½ feet at high and 20 feet at low water, its height was 41½ feet, and its sectional area 486 square feet. The wall of 1809 was designed in view of vessels navigating the harbour only at or about high water. The wall of 1858 provided for the mass of ordinary vessels coming and going at the time of low water as well as high water, and for large vessels in berth being water borne, for as long a period of the tide as possible.

This great development of harbour accomodation was concurrent with the growth of the city and its trade, and the following figures are interesting in this connection:—

The population, which in 1811 was 100,749, increased, by 1858, to about 382,000.

The Customs' revenues collected at Glasgow amounted to £3,124 in 1812, reached £801,894 in 1858.

The number of vessels on the register at Glasgow, in 1812, was only 35, with a tonnage of 2,620 tons, but by 1858 the number was 628, with a tonnage of 224,750 tons.

The number of sailing and steam vessels arriving at the port increased from 11,505, with a tonnage of 696,261 tons, in 1828, to 18,146 vessels, with a tonnage of 1,564,891 tons, in 1858.

And the revenue from the harbour and river, which in 1792 was £2,739 and in 1809 was £5,407, attained to the large sum of £78,783 in 1858.

Discussion.

The AUTHOR said it had been asked why he stopped at the year 1858. It was the most suitable time for drawing to a conclusion. The line had to be drawn somewhere, and it so happened that 1858 was a particular milestone in the history of the Clyde Navigation Trust, that being the year in which all its acts were consolidated. After the conclusion of the works in that year there was a period of rest, at the termination of which the construction of works was resumed on entirely different lines. The cylinder system of constructing walls then came into vogue. For these reasons, therefore, he had thought it better to stop at the year 1858. It brought the history of the port down to the time when it became the desire of the Trustees to provide deep water at low tide. As trade grew, this was of the greatest importance. It went without saying that vessels should be free to move at almost any time of the tide. Vessels with deep draught would move only at high water, but ordinary ships should be free to move at half tide or even at low water. On referring to the first drawing of a quay wall which was given, it would be seen that the depth at high water was only 9 feet and at low water only 3 feet, and from the last diagram it would be seen that the depth at high water was 28 feet 6 inches and at low water 20 feet. The depth at high water had been increased more than three times what it was in 1809.

Mr James Waddell.

Mr James Waddell (Member) said he would like to ask one question of Mr Alston, and that was with reference to the time occupied between a high tide and the next high tide. He himself had had a little experience on the river, and he thought that if the time between high water and high water was, say, twelve and a half hours, it ebbed for about six and a half hours and flowed for about six. If that was so, the wall was being supported for six hours by the water, and the material around the piles had half an hour longer in every twelve hours, or one hour per twenty-four in which the water that had lodged behind the wall permeated through the ground underneath, thereby undermining it and hastening it to slip forward. He would be pleased to hear Mr Alston say something on this point.

Mr John Barr (Member) asked Mr Alston whether he had found that the pipes through the wall were really efficient or did any good in preventing the wall from being driven forward, also, whether the wall when bound by land ties to an independent wall a good bit back from the main wall, was found to be an efficient method of holding the wall up?

Mr C. P. Hogg (Member) thought the Institution was greatly indebted to Mr Alston for placing on record so much valuable information regarding the old quay walls of Glasgow. As Mr Alston himself had said, the paper was not one which lent itself to much discussion, but he thought it was none the less valuable on that account. The year 1858 was a convenient break in the history of the Clyde Trust, but he hoped that would not prevent Mr Alston in a future session contributing a paper on the new quay walls of Glasgow harbour. There was no one, he believed, who had so much information on the subject as Mr Alston, and he hoped he would take the hint. The progress of Glasgow during the last century had been so phenomenal that he thought it was no reflection on the early engineers to say that they failed to realize the possibilities of the harbour and to anticipate these by building the quay walls at a much lower level, but one was really surprised to find that engineer after engineer continued to make the same

Mr C. P. Hogg.
mistake by building the successive walls on a high level, and, he thought, one was more especially surprised to find an engineer like Mr Walker insisting on building quay walls on soft material without the use of bearing piles. He had been much struck by the fact that while engineers had many formulæ for determining the stability of retaining walls to resist overturning, most of the failures had occurred by sliding forward, and he should like to ask Mr Alston whether the many failures of these quay walls had occurred chiefly by overturning, or, by the way which he thought was more usual in cases where there were retaining walls, namely, sliding forward and subsiding. He noticed on the sections that a datum line was drawn, and he would like to ask Mr Alston what the relation of that datum line was to the Ordnance datum. On Plate XX there was a very interesting section showing the river bed at various periods from 1755 to 1853. The deepening of the river had been the means of lowering the level of low water in a very remarkable degree. Naturally, the level of high water had not been affected much, but, as they all knew, the effect had been to greatly increase the tidal range. Perhaps Mr Alston might be able to give some figures as to the lowering of low water, and any alteration—which he understood was very small—on the level of high water, and also of the increase of the tidal range as the effect of the deepening works. He did not think there was anything else he might direct attention to. The failures which had occurred were extremely interesting to engineers, and no doubt these were caused chiefly by the lowering of the river bed and the washing out of the soft material underneath the foundations. He thought the members were all indebted to Mr Alston, who might, on some future occasion, contribute a paper on the new quay walls of Glasgow harbour.

Mr A. S. Biggart, (Member) was impressed most in reading the paper by the record of the number of failures that had taken place in the works of the engineers of the period under review. That applied, he thought, in a much greater degree to the quay walls of the Clyde Trust than it did to other engineering works of an

analogous kind. It would be extremely interesting if Mr Alston in any future paper—which he earnestly hoped he would contribute—would deal somewhat more fully with these failures. He (Mr Biggart) was engaged a short time ago in the repairing of what was considered to be one of the worst quay wall failures within the scope of the Clyde Trust's authority. This was at the foot of Robertson Street, where the quay gave way time after time and which within the last few years seemed to have got so bad that it threatened to carry with it the street, and even the houses, towards the river. His firm were asked to submit a scheme for the renewal of this wall. Finally it was decided to sink, under air pressure, seven caissons, each about 80 feet long by 18 feet wide, some of which were carried down to a considerable depth. In sinking the caissons, it was observed that where the failure had taken place a large sloping bed of soft clay lay underneath, at a depth well below the bed of the river, and this apparently was the primary cause of the trouble. The surest way of effectually overcoming this was to carry the caissons below this material to a bed of sand found at a depth as much as 70 feet below the level of the quay. This was done and no further trouble had arisen. Another point which he hoped Mr Alston would deal with was a matter raised by himself when referring to a strong difference of opinion between two eminent engineers, as to the value of bearing piles beneath the quay wall. In many cases bearing piles were extremely valuable, while in other cases they were of little or no worth. This, of course, depended very largely on their position and the nature of the soil into which they were driven. A little bit of personal experience in connection with the drawing of piles in the river Tyne might be of interest. The soil in this case was of a clayey nature and from careful records it was ascertained that in some cases it took a pull equal to one ton per superficial foot of the area of the pile to withdraw it from the bed of the river. In such a case the bearing value of piles was of great moment. He hoped that if Mr Alston read another paper he would extend it so as to deal with the works he was at present carrying out in

Mr Alston.

connection with the new Shieldhall dock, where a series of caissons were being sunk in a way that would probably give the Clyde Trust one of the cheapest as well as one of the best docks in the country.

Mr ALSTON in reply to Mr Hogg said that in almost every case of failure the walls went forward at the bottom, seldom heeling over at the top. The old walls, as would be observed from the drawings, were nearly all founded on piles, and the piling being often defective, the material got washed out through the joints, more especially as the deepening of the river by dredging went on. A period then arrived when the masonry section was left standing on stilts, and in course of time the foot of the wall would move forward and the heads of the piles would incline outwards. With regard to the datum line, that represented the level of the cope at the first of the quay walls built on the south side of the harbour, namely, the one commencing at Glasgow bridge and going downwards to West Street, and the connection between it and the old Ordnance datum was that the level of the wall was 13·81 feet above Ordnance datum. As to the reference made by Mr Waddell to the interval of the tide, it amounted to about twelve hours and twenty minutes, but this time was not equally divided between flow and ebb, the flow being less. Investigations in 1853 showed that the average flow of spring tides was five hours and fourteen minutes and the average length of ebb seven hours and five minutes. Owing, however, to the continued deepening and widening of the river, the inequality between the duration of ebb and flow was much diminished, the times now being nearly equalized. Replying to Mr Barr's question he said it was doubtful whether the cast iron drain pipes were really of much benefit. They were fitted with hinged flaps, which were expected to continue working. The flaps did work for a certain time, but generally they got rusted up, and the pipe remained either closed or open. In the recent walls, drain pipes had not been put in. Mr Biggart referred to the work with which he was connected at the foot of Robertson Street. That part was the very worst in the harbour as regarded material.

Mr Alston.

The treacherous strata there, extended across the river to the south side where it caused a very great amount of trouble. The caissons put down by Mr Biggart's firm had thoroughly overcome the difficulties on the north side, and there was now no movement of the quay whatever. At that particular place the reconstruction of the quay was the third or fourth which had been carried out and this would afford some idea of the badness of the material to be contended with. Nothing stood until this system of caissons was adopted, whereby the foundations were got down through the treacherous mud or clay. The greatest depth reached being about 70 feet below the coping. The latest form of quay wall foundations which had been referred to by Mr Biggart, was the system being carried out at Clydebank dock. The foundations there consisted of caissons built of brickwork or concrete, each caisson being 30 feet long and 21 feet broad. There were six wells in which an ordinary "grab" digger worked, and as the material was thus excavated the caisson sunk. The work was very interesting. A commencement was made with steel shoes, but, these being found rather expensive, a wooden shoe was tried and proved to be so efficient that its use had been continued. After the substructure was formed by the caissons, the superstructure was completed in concrete. Some of the members had been kind enough to ask him to prepare another paper bringing the history of the quay walls down to a later date, but they must allow him to reserve the right to refrain from making rash promises. He was much obliged to the members for the kind way in which they had received the paper and this was sufficient compensation for the trouble he had taken in preparing it.

The PRESIDENT, in proposing a vote of thanks to the author, said they all appreciated the great amount of trouble and research that it must have caused Mr Alston to prepare such a paper. He only hoped that, while Mr Alston would not agree to any rash promises, he would yet gratify them by continuing the paper, giving an account of the more recent work carried out.

The vote of thanks was carried by acclamation.

*COPY OF ORIGINAL CONTRACT FOR CUNARD STEAMERS, DATED 18TH MARCH, 1839.

IT is contracted, agreed, and ended between Samuel Cunard, Merchant in Halifax, Nova Scotia, and Robert Napier, Engineer in Glasgow, in manner and to the effect following. That is to say, the said Robert Napier binds and obliges himself and his heirs, executors, and successors, to build and construct, with the best materials, for the said Samuel Cunard, his executors, and asignees, Three good and sufficient steam ships, each not less than Two hundred feet long keel and fore rake, not less than Thirty-two feet broad between the paddles, and not less than Twenty-one feet six inches depth of hold from top of timbers to underside of deck amidships, properly finished in every respect, having boats, masts, rigging, sails, anchors, cables, and whole other usual and necessary appurtenances for the working and sailing of the said vessels; with Cabins finished in a neat and comfortable manner for the accomodation of from sixty to seventy passengers, or a greater number in case the said Robert Napier shall find that the space will conveniently and commodiously admit thereof; each of which vessels shall be fitted and finished with two steam Engines having cylinders seventy inches in diameter, and six feet six inches length of stroke, with malleable iron boilers, the details of which, vessels and machinery, shall be constructed in the manner mentioned in the specification annexed and subscribed by the parties as relative hereto, declaring that the said Robert Napier shall only be bound to furnish one complete set or suit of all things usual or necessary for such a size of vessels, but to furnish no duplicates or spare stores, sails, ropes, anchors, spars, &c., nor anything belonging to the steward's department, such as silver plate, china, crystal, knives and forks, napery, or other like articles, nor arms, chrono-

*This copy has been printed from a transcript presented to the Library of the Institution, by Mr James Napier.

meters, maps, charts, or other articles of that description. Which three vessels all to be delivered on the Clyde. The said Robert Napier hereby Binds and Obliges himself and his aforesaid to finish and complete, to the entire satisfaction of the said Samuel Cunard, equal in quality of hull and machinery to the steamer Commodore or the steamer London, both constructed by the said Robert Napier, and equal to the City of Glasgow steamer in the finishing of the Cabins, also constructed by the said Robert Napier; and the said Robert Napier Binds and Obliges himself and aforesaid to have one of the said vessels ready for trial and delivery in the Clyde on or before the Twelfth day of March, Eighteen hundred and Forty; to have one of the said vessels ready for trial and delivery as aforesaid on or before the Twelfth day of April, Eighteen hundred and Forty; and one of the said vessels ready for trial and delivery, as aforesaid, on or before the First day of May, Eighteen hundred and Forty. And further, the said Robert Napier hereby Binds and Obliges himself, and his aforesaid, in the event of any part of the machinery in any of the said vessels giving way or breaking within six months after delivery of the said vessels respectively, to replace by new machinery, or, to repair the broken parts; unless such occurences may have arisen from neglect or carelessness on the part of those in charge of the machinery, in which case, as well as in the case of burning of the boilers or accidents arising from other causes over which the said Robert Napier can have no control, he shall be in no way responsible. In consideration of which, and as the price of the said three steam vessels, the said Samuel Cunard Binds and Obliges himself and his heirs, executors, and successors to make payment to the said Robert Napier and his heirs or asignees of the sum of Thirty-two thousand pounds sterling for each of the said vessels, or Ninety-six thousand pounds sterling for the whole three vessels, of which price Sixty thousand pounds sterling shall be payable in Cash, or by approved bills equal to Cash, during the progress of the work, and the remaining Thirty-six thousand pounds sterling, being Twelve thousand pounds sterling of the

price of each of the said vessels, at the delivery of the said vessels respectively as follows, *viz.*,—Five thousand pounds sterling at the execution of these presents; Five thousand pounds sterling on the Twelfth day of April next; and the like sum of Five thousand pounds sterling on the Twelfth day of each of the succeeding months of May, June, July, August, September, October, November, and December, Eighteen hundred and Thirty-nine, and of January and February Eighteen hundred and Forty, making together the foresaid sum of Sixty thousand pounds sterling payable during the progress of the work, upon which the said monthly payments shall cease, and there will remain due of the said contract price, Thirty-six thousand pounds sterling, which the said Samuel Cunard Binds and Obliges himself, and his aforesaid, to pay or secure to the said Robert Napier at one and the same time with receiving delivery of the said several vessels as follows, *viz.*—the sum of Twelve thousand pounds sterling at the delivery of each of the said vessels, and that in approved bills at six months from the date of delivery of each vessel respectively, making up the said balance of Thirty-six thousand pounds sterling, or in the option of the said Samuel Cunard, each of the said sums of Twelve thousand pounds sterling may be divided into three approved bills of equal amount, payable at six, nine, and twelve months from the date of the delivery of the said respective vessels, but in the event of exercising such option the said Samuel Cunard shall be bound to include interest in the said bills at nine and twelve months after the rate of five per cent, per annum, for the period thereof to run after the lapse of six months from the date of delivery of the said vessels respectively, till payment of the said several bills. Provided always that it shall be lawful to and in the the power of the said Samuel Cunard, or any person appointed by him, occasionally to visit the building yard or yards, in which the said vessels may be built, as well as the engineer work or works, in which the machinery may be constructed, to the effect and for the purpose of inspecting the state and condition of the said vessels

and machinery, ascertaining the sufficiency of the materials and workmanship, and seeing to the progress of the work. Provided further, that notwithstanding the noncompletion of the whole work, the different parts and portions of the said vessels and machinery, by virtue of the payment of the instalments herein before mentioned, shall from time to time be held as specifically appropriated to and vested in the said Samuel Cunard, subject to the right of the said Robert Napier to retain such parts and portions for the purpose of completing the work according to this agreement, and for his, the said Robert Napier, security of the prices of the said vessels so far as unpaid, the said vessels always remaining at the said Robert Napier's risk until the same are respectively ready for delivery as aforesaid; after which the same shall be at the risk of the said Samuel Cunard. And further, the said Robert Napier hereby Binds and Obliges himself and his aforesaid to have the said several vessels ready for trial and delivery on or before the days respectively herein before specified, and that under the penalty of Five thousand pounds sterling applicable to each of the said vessels; unless the completion of the same or any of them shall be prevented by the destruction thereof by fire before delivery, or any other cause which the said Robert Napier cannot possibly control, of which the arbiter herein after mentioned shall in case of difference be sole judge.

And both parties Bind and Oblige themselves and theirs aforesaid, to implement, observe, and fulfil their respective parts of the premises, as well as all decrees arbitral to be pronounced in virtue of the submission after written each to the other in all respects according to the true intent and meaning of these. And in case any question, dispute, or difference shall arise between the said parties as to the real import of these presents, or the execution or implement thereof, or in any manner of way in the premises at whatever time the same may arise; all such disputes and differences, shall be, and the same are hereby submitted and referred to the amicable decision, final sentence, and decree arbitral, of James C. Melville, Esq., Secretary to the East India Coy., whom

failing by non-acceptance, death, or otherwise, of William Connal, Esq., Merchant in Glasgow, and the decision of either of the said arbiters, acting under this reference, shall be final and conclusive to all intents and purposes. And both parties consent to the registration hereof, along with the decrees arbitral, interim or final, to be pronounced in virtue of the submission herein before written in the Books of Council and Session, or others competent therein to remain for preservation, and that letters of Horning in six days charge, and all other legal execution necessary, may follow herein in form effeirs and thereto constitute.

Procurators.

In witness whereof these presents written upon this and the three preceding pages of stamped paper, by Robert Henderson, clerk to Moncrieffs and Paterson, Writers in Glasgow, are subscribed along with a duplicate hereof by Mr Samuel Cunard and Robert Napier, before designed, at Glasgow, the Eighteen day of March, Eighteen hundred and Thirty nine years, before these witnesses—Hugh Moncrieff, Writer in Glasgow, and the said Robert Henderson, Writer, hereof.

Signed	Hugh Moncrieff	witness	S. Cunard.
,,	Robert Henderson	,,	R. Napier.

THE "JAMES WATT" ANNIVERSARY DINNER.

THE "JAMES WATT" ANNIVERSARY DINNER under the auspices of the Institution was held in the Windsor Hotel, St. Vincent Street, Glasgow, on Saturday evening, 24th January, 1903. The chair was occupied by Mr WILLIAM FOULIS, President of the Institution, and the croupiers were Mr Archibald Denny, Mr Thomas Kennedy, and Mr James Weir. Upwards of 290 gentlemen were present.

The President was supported by The Hon. Lord Provost, John Ure Primrose; The Right Hon. Lord Inverclyde; Col. J. M. Denny, M.P.; Mr H. O. Arnold-Forster, M.P.; Sir David Richmond; Mr Matthew White, Deacon-Convener of Trades' House; Lieut.-Col. H. Dobie, R.A.; Mr Philip Watts, Director of Naval Construction; Mr William Beardmore; Prof. J. H. Biles, LL.D.; Lieut. A. T. Dawson; Fleet-Engineer C. H. Pellow, H.M.S. Benbow; Bailie R. M. Mitchell; Mr William Jacks, LL.D., President, West of Scotland Iron and Steel Institute; Mr Matthew Paul; Bailie James M. Thomson; Mr C. C. Lindsay, President, Glasgow Association of Students I.C.E.; Mr H. R. Robson; Mr James Gilchrist; Prof. Archibald Barr, D.Sc., President, Royal Philosophical Society, Glasgow; Mr J. D. Hedderwick, President, Glasgow Chamber of Commerce; Mr J. R. Richmond; Mr J. M. Blair; Mr Gilbert S. Goodwin; Mr H. A. Mavor, President, Institution of Electrical Engineers, (Glasgow Section); Mr J. M. Crawford, President, Glasgow Art Club; Mr Robert Laidlaw; Mr William Brown; Dr. Freeland Fergus, Secretary, Royal Philosophical Society, Glasgow; and Mr F. T. Barrett, City Librarian.

The loyal and patriotic toasts having been duly honoured,

Lord INVERCLYDE gave "The Imperial Forces." The South African war, he said, had warned us not to sit down in such a self-satisfied spirit as we perhaps had done in the past. On the other hand, that conflict had revealed to us that we had men in

Lord Inverclyde.
this country and kinsmen all over the world who were as gallant and hardy and ready as ever to do what any of the men who had an honoured place in the history of the country had done. As things were to-day, we, of all nations, required to maintain our position in the world. We must keep our navy in the very first rank. We must have an army that would let the nations of the world see that we were able when necessary to go into the field and defend our interests.

Lieutenant-Colonel H. Dobie, R.A., acknowledged the services rendered by the shipbuilders and the engineers of the country in building the ships which had enabled us to carry our troops to the Cape from the four quarters of the globe. He was proud to be there that night in the seat of the shipbuilding and engineering trades—Glasgow, the centre of these great industries.

Colonel J. M. DENNY, M.P., proposed "The City of Glasgow." Much of the benefit of the Clyde, he said, had been autocratically drawn on to make Glasgow what it was. The river was our pride, and he for one would not believe that it was not good enough to build both of the new Cunarders on. Glasgow was a city of business, a place of manufactories, full of men eager and willing to take part in the world's fight for trade. In two successive Exhibitions, the city had invited the world to come and see how we did things, not only artistically, but, from a financial point of view, successfully. Musically, Glasgow took a high place, and we were training all classes to appreciate the work of our Scottish Orchestra. Principal Story, he was afraid, would not admit that the city had yet risen to the height he would desire in university education. He would doubtless say that what was required was not so much students as equipment. To whatever extent we were indebted to Dr. Carnegie we wanted some more of the same generous disposition in other ways of expansion. For technical purposes our local college in its new quarters would bring us good, solid results. Referring to the Town Council, he said that no one had ever questioned the purity or the ability of its members, and so long as they were satisfied on these two points, they need have

little to fear. In Glasgow we did not sell the franchise of our tramways. We made and ran them. In gas—of the illuminating description—Glasgow did wonders in the way of management and economy, while in its great rival, electricity, the city had shown itself capable of possessing and controlling an installation second to none. Discussing the Corporation telephones, he said that some day these might be used in Corporation houses for various grades of society, when Glasgow could convince Parliament that it was wise to spend three-quarters of a million in building houses in which to put telephones, which the Government might take over in 1911. Some people objected to such uses of money by municipalities, and a sarcastic critic told him the Council seemed to think they had balanced matters by taking the money of the well-to-do to house the poor, and dipping into the pockets of the poor to provide telephones for the well-to-do. Joking apart, the housing problem was a serious one, and one which in this country must be faced in an organised and systematic fashion. But there were many who, like himself, questioned if a Corporation was the body to solve it. Private enterprise and philanthropy, which, when joined together, were an enormous power, properly encouraged and supervised, and not scared by threats and eternal competition with the bottomless purse of the ratepayers, could, and would, do it for a very moderate return.

Lord Provost Primrose in reply, said he would like at the outset to say how gratified he felt at being present at that anniversary dinner. The name of him whose memory they honoured summed up the very perfection of strenuous effort combating and overcoming difficulties, and left behind a rich heritage, not only to our community, but to mankind in general. He hailed Colonel Denny as a very brother, for in all the cardinal points of local government in which the municipality of which he was the head had travelled or adventured he had given his sign-manual of approval to every act. In the departments—gas, electricity, and tramways—he had equally cordially admitted that these were public services and proper spheres for communal

Lord Provost Primrose.
effort. With these opinions the Lord Provost agreed. Adverting to the Corporation telephones, Lord Provest Primrose confessed that he did share Colonel Denny's fears, but being an accomplished fact he now must endeavour honestly and loyally to make them a success. He did not regard them as an elemental service necessary to every branch of the citizens, and to that extent he did not think that they came directly within commercial conduct. He might have been right or wrong in that. The longer he lived the more did he hesitate to predicate what the future might hold for us, but he was convinced of this that we must make solid and firm the steps we had already taken before we adventured further. As to the river Clyde, he thought it was to the everlasting credit of the Corporation that they were the first to recognise that in that avenue of approach to the city lay a channel through which much material prosperity would flow, and though measured in the light of to-day their efforts might appear small, they at least had the dawning of the fact that that great waterway offered opportunity for wider trading and greater commercial success. He only expressed his own individual opinion in these remarks, but he was almost certain that in so doing he foreshadowed what would come to pass in the future.

Mr H. O. ARNOLD-FORSTER, M.P., proposed the toast of the evening—"Engineering and Shipbuilding Industries." He was sure, he said, that they would sympathise with him in his difficulty in succeeding two speakers whose oratorical powers had given them the treat they had just enjoyed. They would understand his difficulty in speaking as an amateur to a professional audience such as could hardly be equalled in any city in the Empire. He, however, had had an opportunity during the last twenty years of his life of living on the fringe and seeing something of the great work of which they were past masters, and having been for sixteen years a daily worker in a great manufacturing business he had had an opportunity of learning something of the fascination—the absorbing fascination—which attended the practice of the great mechanical arts. But he asked them to let him speak for a few

minutes, not merely as an amateur, but for the moment as the representative of a great Department which owed much—must always owe much—to their great industries, and which was profoundly interested in the success and welfare of shipbuilding and engineering, and might he say, which had shown by its acts that it was very deeply interested in the welfare of shipbuilding and engineering in the district of Glasgow and the Clyde. Their philosophers in the University of Glasgow, he believed, would prove to them probably almost all things, but they would also prove to them that the division between mind and matter was a very slight and almost imperceptible division. But this he might say that in the administration of the service of the navy there was a distinction between what he might call the mind and the matter of the navy which was sharp, accentuated, clear, and unmistakable. When he spoke of the mind and the matter of the navy, he spoke of the material and personnel of the navy. Not only was the division between them sharp, but the treatment which we must accord to either of them was very distinct. In dealing with the porsonnel of the navy we must be, as far as we could be, always conservative; we must endeavour to preserve every tradition which could be usefully preserved, and which helped us to carry on the great work which had been done by those who had made the British navy what it was. In the matter of materiel, an exactly opposite policy must be pursued. Radical reform, and the acceptance, the early acceptance, of every improvement was the policy which must guide us. He thought he might claim that the Admiralty was doing, or trying to do, something in the direction which they as men of science, men accustomed to the application of science to the progress of life, would desire that it should do. But it was an essential condition of success that they should be working in full harmony with the best scientific guidance, the best scientific knowledge of this country. He ventured to believe, and he thought he was not going beyond what he was entitled to say, when he said that they were ready to accept, and desirous to accept, the help of the great professional communities represented

Mr H. O. Arnold-Forster.
there. The principle of the Admiralty, he believed, in all its applied work, was to endeavour to get abreast and to keep abreast of the engineering progress of the country. There was, unfortunately, this fatality—which overhangs all the manufacturing departments of the Admiralty—that it was an institution with a past. There were some great Admiralties in the world which were not blessed or were not cursed with a past. It was impossible for a great institution, some of whose factories dated in continuous succession from the time of Queen Elizabeth, to adopt some of those root and branch methods which might be adopted by some of the great firms on the shores of the Clyde. Sheerness dockyard came into prominence when the Dutch sailed up the Medway and destroyed our ships. It had been a living organism in our naval and national life for 300 years, and it was not easy, even with the best intentions, to recreate this institution with the thoroughness and completeness which those who were living a life of greater freedom and less responsibility were able, perhaps, sometimes to exercise. But they did see what was the object and what was the aim in view, and though they might never attain—and few ever attained to ideal perfection—they had that ideal before them. They could only approach the attainment of it by taking into counsel those who were labouring in the same field as they were, with, perhaps, in some respects, greater opportunities. They were not merely preaching that doctrine, but they were practising it. Only two years ago it fell to his lot to preside over a committee which was charged with inquiring into the question of the arrears of shipbuilding for the navy. They invited every important contractor and shipbuilder for the Admiralty, to come and frankly state their views. They met with a hearty and prompt response from the heads of the great manufacturing firms of the country, and he regarded with some satisfaction the results of that inquiry, because even before they got the report of that commission printed they were carrying out more than half of the recommendations made to the Admiralty. The Admiralty were also now carrying out a policy, not absolutely new, but almost entirely new, of sending to the great contracting firms their ships

to repair. They were repairing them upon a system which had always commended itself to the commercial world, but which until recently had never commended itself to the Admiralty. They now held out the right hand of fellowship to the contracting firms, and they were confident that they would be met as they ought to be met, and that the country would gain by the rapidity, and, he trusted, the economy, with which the work would be carried out. They had asked the co-operation of the engineering genius of the country to an extent they had not asked before for the designs of their ships, and they had introduced into the permanent service of the Admiralty one whose genius and talent were for a long time available only for one of the great manufacturing establishments of the country. They were also asking some of the great engineering firms to supply them with designs, so that if there was any ingenuity or any enterprise lacking within their own four walls, that might be supplemented by the efforts and ingenuity of those who were untrammelled by those bonds of red tape which were supposed to be always encircling the official limbs. They were making another departure, which he thought they would agree was a businesslike departure—they were entrusting to the great shipbuilding firms the duty of completing their ships for sea, and they hoped that they might take ships straight away from the Clyde yards, and from all the English and Scotch yards, and pass them into the first division of the dockyard reserve ready to go to sea the day they arrived at the dockyards. They would thus be freed in the future from that process which always seemed to him unnecessary and most undesirable of pulling to pieces the ships that came to the dockyards, in order to do over again the work which had been done in the contracting yards. The Admiralty as a Department, and he as a subordinate member of the Government, had also taken a part in furthering for the first time, co-operation between the Government and the applied wisdom of the great scientific corporations in forwarding the practice of standardising the material of this country. He believed he was not exaggerating when he said that not less than 50 millions sterling of manufactured goods were controlled by the orders of the British

Mr H. O. Arnold-Forster.
Government, and if they could effect that co-operation which he desired to see between the Government as a Government and the united wisdom of the scientific bodies, and could ensure that all that 50 millions sterling worth of Government goods should be given in consonance with the recommendations of the great standardising bodies which had been working so hard during the past year, they would, at one stroke, have introduced into the manufacturing of this country that which the Continent of Europe had been working for many years to achieve, and which the United States possessed now greatly to its advantage. With regard to the personnel of the navy, the Admiralty had been making a very great change—some people might almost call it a revolution—in the whole system of entering and training in the personnel of the navy. That change, which was not confined to the officers only, but would affect almost every branch and rating of the naval service, was entering upon its first stages of triumph. It had received, he was happy to say, a welcome which was most encouraging from the intelligent and educated opinion of the country, but, he thought, there was no man on the Board of Admiralty, no man connected with the service of the Admiralty, who was unwise enough to believe that because that scheme had been formulated, because these proposals had been thought out and put before the public, that the work was accomplished and the battle won. The success of that scheme—and he believed it was destined to succeed—would depend upon the thought that was given to the application of it, and, above all things, to the course of education which was given to those who were to be the personnel of the future, and who were to make the scheme succeed or fail. It was the intention of the Admiralty to take no step in formulating this all-important course for the officers and for the men without endeavouring to ascertain if they were in harmony with the views of the best guides in education, in engineering, and in applied science. They hoped to make the course profitable for every boy and every man who went into the navy, and they remembered it had been truly said this was an age of specialisation. Some had said they were not specialising enough. But he gave them this

caution, that they had to specialise, above all, for one particular object. They had to make an engineer, they had to make a Royal marine, they had to make a navigating officer; but, above all, they had to specialise to make a naval officer. He must be an engineer, he must be a marine, but he must be a naval officer: and he thought, great as were the qualities which a first-class engineer must possess, he must still possess something over and above to make him what the country demanded—a perfect naval officer. He must be a man who had knowledge—knowledge which was power—but he must be something more. He must still be the man, as he was in the past, who was prepared to die, the man who was prepared to induce other people to die with him. He must be the man ready for every emergency, prepared to endure hardship. All those qualities went to make up the naval officer. It was the business of the Admiralty to add something even to the most perfect product of any purely specialised education. If they would bear in mind, and if, subject to that, they would give the Admiralty their help and assistance, he believed they would be able to do an enormous amount for the benefit of this country. He believed under this new proposal of the Admiralty, the time would come when they would be able to give to the engineer in the Royal Navy, that opportunity within the service which they were sometimes told he had lacked, and which they felt it was most desirable he should receive. But he was quite certain that they would never be able to give him that opportunity, unless they made the training and the education of the engineer such as would be recognised by those who were the leaders of the engineering world as the best training which science and application could give him. That was the object of the Admiralty, and that was their hope. Under these circumstances he thought they might appeal, and he was sure they would not appeal in vain, for the support of such an assembly as that, interested as they were in everything that concerned the welfare of the country.

THE CHAIRMAN (Mr Foulis), in responding, thanked Mr Arnold-Forster for the appreciative references he had made to the work of engineers. He also expressed their appreciation of that great

Mr Foulis.
scheme of Admiralty reform with which, in his official capacity, he was so closely connected. As he had said, this scheme of reform almost amounted to a revolution in the training and the relative positions of the officers of the Royal Navy. The scheme recognised for the first time the great importance, the almost paramount importance, of the engineer in the management and control of that box of complicated machinery which formed the modern man-of-war. Not only had the Admiralty recognised the importance of the engineer, but they had provided that the officers of all branches of the service should, in their official training, receive, at all events, fundamental instruction on the principles of engineering, which, while it might not make them engineers, would at least have the effect of enabling them to appreciate more fully the value of the labours of the engineer. There was considerable feeling on this matter among engineers. Many of them thought that these changes should have been effected long ago, but he would like to point out that in carrying out such a great scheme there were many difficulties to be overcome, many prejudices to be got rid off, and it said a great deal for the Board of Admiralty that they had overcome those difficulties and got rid of those prejudices, and formed a scheme which, he thought, would add to the efficiency of the Royal Navy not only in times of peace, but, perhaps in a greater degree, in the stress and strain of war. Mr Arnold-Forster had referred to the progress which was being continually made in engineering. That progress was going on constantly. Their work was becoming more and more expansive, more and more varied, and the problems which they had to solve were such as were not dreamt of a few years ago. The anniversary dinner which they celebrated that night was inaugurated many years ago to commemorate James Watt, and although in recent years references to James Watt had been few and far between at their proceedings, yet he thought it was wise that they should continue that commemorative feast, and that James Watt's memory should be held in reverence by every engineer.

In the course of the evening an interesting programme of vocal and instrmental music was submitted.

MINUTES OF PROCEEDINGS.

FORTY-SIXTH SESSION.

AN EXTRAORDINARY GENERAL MEETING was held within the Hall of the Institution at 207 Bath Street, Glasgow, on Thursday, the 2nd October, 1902, at 8 p.m.

Mr WILLIAM FOULIS, President, occupied the chair.

The Articles of Association were taken into consideration, and the draft of the new Articles proposed by the Committee, specially appointed for the purpose, was laid before the Meeting and duly considered and discussed. The discussion was, as arranged by the Council, taken down and recorded by a shorthand writer, and the extended notes of the shorthand writer are engrossed in the Minute book and signed by the President as relative to this Minute.

Several alterations and additions were made upon the draft, and thereafter, on the motion of the President, the following resolution was passed, namely:—

> "That all the Articles of Association of the Institution be and are hereby annulled, and that there be substituted therefor, as the Articles of Association, the Articles, the draft of which has been approved and adopted by this Meeting, and which for the purpose of identification has been signed by the Chairman of the Meeting and the Secretary."

AN EXTRAORDINARY GENERAL MEETING was held within the Hall of the Institution, 207 Bath Street, Glasgow, on Monday, 20th October, 1902, at 8 o'clock p.m., for the purpose of con-

firming the following Special Resolution which was passed by an Extraordinary Meeting of the Institution on 2nd October, 1902, namely:—

> "That all the Articles of Association of the Institution be and are hereby annulled, and that there be substituted therefor, as the Articles of Association, the Articles, the draft of which has been approved and adopted by this meeting, and which for the purpose of indentification has been signed by the Chairman of the meeting and the Secretary."

Mr William Foulis, President, occupied the Chair.

The Minutes of the Extraordinary General Meeting held on Tuesday, 2nd October, 1902, were read, approved, and signed by the President.

The above Resolution was put to the Meeting and unanimously adopted.

Thereafter, it was resolved that the thanks of the Meeting be given to the Committee charged with the Revision of the Articles of Association, and to the Council, for their labours in this connection.

The President acknowledged the Resolution.

An Extraordinary General Meeting was held in the Hall of the Institution, 207 Bath Street, Glasgow, on Monday, 20th October, 1902, at 8-15 p.m.

Mr William Foulis, occupied the Chair.

The Secretary having read the notice calling the Meeting, the Chairman remarked that the Meeting had been convened for the purpose of nominating Members and Associates for the new Council; and in accordance with the new Articles of Association, the retiring Council had proposed a list of names, but it was open to any Member present to add to that list.

The following names having been written on the blackboard, it was resolved that these names should constitute the ballot list:—

President, WILLIAM FOULIS; *Vice-Presidents*, Professor J. H. BILES, LL.D., W. A. CHAMEN, ARCHIBALD DENNY, C. P. HOGG, THOMAS KENNEDY, CHARLES C. LINDSAY, GEORGE M'FARLANE, JAMES MOLLISON, JAMES WEIR, R. T. MOORE, B.Sc., WILLIAM BROWN, and JAMES GILCHRIST; *Members of Council from Class of Members*, Professor J. H. BILES, LL.D., W. A. CHAMEN, ARCHIBALD DENNY, C. P. HOGG, THOMAS KENNEDY, CHARLES C. LINDSAY, GEORGE M'FARLANE, JAMES MOLLISON, JAMES WEIR, R. T. MOORE, B.Sc., WILLIAM BROWN, JAMES GILCHRIST, THOMAS A. ARROL, Professor A. BARR, D.Sc., ALEXANDER GRACIE, MATTHEW PAUL, WILLIAM B. SAYERS, F. J. ROWAN, W. M. ALSTON, WILLIAM MELVILLE, JAMES STARK, JOHN BARR, A. W. SAMPSON, H. W. BROCK, JOHN WARD, A. D. WEDGWOOD, E. HALL-BROWN, STAVELY TAYLOR, JOHN STEVEN, and HENRY MECHAN; *Members of Council from Class of Associates*, GEORGE STRACHAN, JAMES NAPIER, J. D. YOUNG, LAURENCE MACBRAYNE, FREDERICK C. GARDINER, and THOMAS PRENTICE.

Mr WILLIAM M'WHIRTER and JAMES ROWAN were appointed Scrutineers to examine the ballot papers.

THE FIRST GENERAL MEETING was held in the Hall of the Institution, 207 Bath Street, Glasgow, on Friday, 31st October, 1902, at 8 P.M.

Mr WILLIAM FOULIS occupied the Chair.

The Minutes of the Annual General Meeting held on 15th April, 1902, were read, confirmed, and signed by the Chairman.

ELECTION OF OFFICE-BEARERS.

Mr JAMES ROWAN and Mr WILLIAM M'WHIRTER, the Scrutineers appointed to examine the ballot papers for the election of Office-Bearers for the current Session, submitted their report, and Mr

ROWAN announced that Mr WILLIAM FOULIS had been elected *President;* Prof. J. H. BILES, LL.D., and Messrs ARCHIBALD DENNY, JAMES GILCHRIST, THOMAS KENNEDY, JAMES MOLLISON, and JAMES WEIR, *Vice-Presidents;* Mr WILLIAM M. ALSTON, Prof. ARCHIBALD BARR, D.Sc., and Messrs H. W. BROCK, E. HALL-BROWN, WILLIAM BROWN, W. A. CHAMEN, ALEXANDER GRACIE, GEORGE M'FARLANE, WILLIAM MELVILLE, MATTHEW PAUL, F. J. ROWAN, ALEXANDER W. SAMPSON, JOHN STEVEN, JOHN WARD, and A. D. WEDGWOOD, *Members of Council from Class of Members;* and Messrs JAMES NAPIER, GEORGE STRACHAN, and J. D. YOUNG, *Members of Council from Class of Associates.*

On the motion of the President, the Scrutineers were awarded a vote of thanks for their labour.

AWARD OF BOOKS.

The President then presented to Mr WILLIAM MELVILLE a premium of books, awarded for his paper on "The City Union Railway Widening and Extension of St. Enoch Station," read 19th March, 1901.

REPORT OF COUNCIL AND TREASURER'S STATEMENT.

Professor ANDREW JAMIESON, commented upon several items in the Report, and drew special attention to the Library and the selection of the most suitable books.

On the motion of Mr THOMAS KENNEDY, seconded by Mr JAMES WEIR, the Annual Report of the Council and Treasurer's Statement were adopted.

The PRESIDENT then delivered a short Address; and on the motion of Professor JAMIESON, a vote of thanks was awarded to the President.

THE HONORARY TREASURER.

The PRESIDENT remarked that the Council had received a letter from Mr Gale stating that through failing health he was compelled to give up the Honorary Treasurership. Mr Gale had been Honorary Treasurer for a very long time. He joined the Institution in November, 1858, was a Member of Council during the Session 1863-64, a Vice-President through Sessions 1864-66,

and President for Sessions 1866-68. He again entered the Council as Vice-President for Sessions 1869-71, and sat as an ordinary Member of Council for the two following Sessions. Since 1879 he had acted as their Honorary Treasurer, and those who were acquainted with Mr Gale knew well that he did not perform those duties merely in an honorary way. The Council had agreed unanimously not only to thank Mr Gale for his long services, but also to ask him to accept nomination as an Honorary Member of the Institution. Mr Gale had consented to accept this nomination, and he had now much pleasure in formally proposing him for election as an Honorary Member.

The proposal was received with acclamation.

THE LATE MR ARROL.

The PRESIDENT stated that many of the Members would have noticed the death of one of the Members of the old Council, Mr Thomas A. Arrol. Mr Arrol had been a Member of the Institution for a very long time, and while he was in the Council he had been a very painstaking and efficient member. It was a matter of sincere regret to all of them to learn of his death.

Thereafter a paper was read by Mr KONRAD ANDERSSON on "Steam Turbines: with Special Reference to the De Laval Type of Turbine."

The following candidates were duly elected, viz. :—

AS STUDENTS.

BROWN, WILLIAM L., Draughtsman, 99 Grant Street, Glasgow.

BUCKLE, JOSEPH, Engineering Draughtsman, Bennie Place, Renfrew.

FERNIE, JOHN, Engineering Draughtsman, 6 Edelweiss Terrace, Partickhill, Glasgow.

FROST, EVELYN F. MEADOWS, Draughtsman, 76 Hill Street, Glasgow, N.W.

MELENCOVICH, ALEXANDRE, Engineering Draughtsman, 21 Peel Street, Partick.

RENNIE, ARCHIBALD, Engineering Draughtsman, 7 Ratho Street, Greenock.

SMITH, JAMES, Draughtsman, 44 Cleveland Street, Glasgow.

STOBIE, PETER, Engineering Draughtsman, 33 Kelvinhaugh Street, Glasgow.

WINDELER, GEORGE EDWARD, Engineer, The Mirlees, Watson Co., Glasgow.

WITHY, VIVIAN, Draughtsman, Kenmore, Bowling Green Ter., Whiteinch.

THE SECOND GENERAL MEETING was held in the Hall of the Institution, 207 Bath Street, Glasgow, on Tuesday, 25th November, 1902, at 8 P.M.

Mr WILLIAM FOULIS, President, occupied the Chair.

The Minutes of the First General Meeting, held on Friday, 31st October, 1902, having been printed in the billet calling the meeting, were held as read, and signed by the President.

Thereafter the discussion on Mr KONRAD ANDERSSON's paper on "Steam Turbines: with Special Reference to the De Laval Type of Turbine," was begun and concluded.

On the motion of the President Mr ANDERSSON was awarded a vote of thanks for his paper.

A paper by Mr J. BRUHN, D.Sc. on "Some Points in connection with the Riveted Attachments in Ships," was held as read.

The following candidates were duly elected, viz.:—

AS HONORARY MEMBER

GALE, JAMES M., Civil Engineer, City Chambers, Glasgow.

AS MEMBER FROM STUDENTS' SECTION.

CLELAND, WILLIAM A., Engineer, Manager Yloilo Engineering Works, Yloilo, Phillipine Islands.

THE THIRD GENERAL MEETING was held in the Hall of the Institution, 207 Bath Street, Glasgow, on Tuesday, 16th December, 1902, at 8 P.M.

Mr WILLIAM FOULIS, President, occupied the Chair.

The Minutes of the Second General Meeting, held on Tuesday, 25th November, 1902, having been printed in the billet calling the meeting, were held as read, and signed by the President.

Thereafter the discussion on Dr. J. BRUHN's paper on "Some Points in connection with the Riveted Attachments in Ships," was begun and adjourned.

A paper by Mr WILLIAM THOMSON on "Circulation in Shell Boilers" was read.

The following candidates were duly elected, viz.:—

AS MEMBERS.

COWAN, JOHN, General Manager, Clydebridge Steel Co., Ld., Cambuslang.

DUNN, J. R., Chief Marine Engineer, 42 Magdalen Yard Road, Dundee.

GILCHRIST, ARCHIBALD, Engineer, Assistant Manager, 36 Finnieston Street, Glasgow.

HENDERSON, JOHN FRANCIS, B.Sc., Managing Director, Albion Motor Car Co., Ld., 169 Finnieston Street, Glasgow.

KER, WILLIAM ARTHUR, Engineer, Manager, Patella Works, Paisley.

KLINKENBERG, JOHN, Electrical Engineer, 4 Derby Street, Glasgow.

MCLEAN, JOHN, Assistant Manager, Meadowside Shipbuilding Yard, Partick.

MOIR, JAMES, Consulting Engineer and Ship Surveyor, 70 Wellington Street, Glasgow.

MOORE, ROBERT H., Engineer, Caledonian Steel Castings Co., Govan.

MUNRO, JAMES, Engineer, 34 Gartland Drive, Glasgow.

PARKER, EDWARD HENRY, Secy., Institution of Engineers and Shipbuilders in Scotland, 11 Strathmore Gardens, Glasgow.

REID, W. J. H., Tool Designer, Redlea, Linwood, near Paisley.

RITCHIE, DUNCAN, Engineer, Works Manager, Hailey, Mount Vernon.

TAYLOR, JAMES, Marine Engineer, 3 Westminster Terrace, Ibrox, Glasgow,

From Students' Section.

CRAIG, ALEXANDER, Engineer, 163 West George Street, Glasgow.

DONALDSON, ARCHIBALD FALCONER, Engineer, Beechwood, Partick.

PRINGLE, WILLIAM STEVENSON, Chief Draughtsman, 15 Elm Place, Aberdeen.

SPALDING, WILLIAM, Engineering Draughtsman, 9 Crown Circus Road, W., Glasgow.

WEDDELL, ALEXANDER H., B.Sc., Mechanical Engineer, Park Villa, Uddingston.

AS ASSOCIATE MEMBERS.

ROBERTSON, ALFRED J. C., Ship Draughtsman, Braeside, Bridge-of-Allan.

SPEAKMAN, EDWARD MURRAY, Marine Engineer, 6 Blythswood Drive, Glasgow.

WOODSIDE, HUGH RAMSAY, Engineer, Artnox, Dalry, Ayrshire.

From Students' Section.

ANDERSON, GEORGE, Engineering Draughtsman, 2 Parkhead Street, Motherwell.

AS ASSOCIATES.

ROBINSON, DAVID, Timber Merchant, 14 Broomhill Avenue, Partick.

YOUNG, ROBERT, Iron and Steel Merchant, Baltic Chambers, 50 Wellington, Street, Glasgow.

AS STUDENTS.

CLARK, JAMES MILLER, M.A., B.Sc., 8 Park Drive, West, Glasgow.
DIAS, CRISTOPHER, c/o. Gow, 273 Dumbarton Road, Glasgow.
DRYSDALE, WILLIAM, Craigard, Dennistoun, Glasgow.
MILLAR, ALEXANDER SPENCE, Towerlands, Octavia Terrace, Greenock.

AN EXTRAORDINARY GENERAL MEETING was held in the Hall of the Institution, 207 Bath Street, Glasgow, on Tuesday, 20th January, 1903, at 7·45 p.m.

Mr WILLIAM FOULIS, President, occupied the chair.

The Meeting was convened for the following purpose, namely, To confirm the Bye-Laws made by the Council on 16th December, 1902, a copy of which was sent to each Member, Associate Member, and Associate, with the notice calling the Meeting.

After some discussion the Bye-Laws were unanimously adopted.

THE FOURTH GENERAL MEETING was held in the Hall of the Institution, 207 Bath Street, Glasgow, on Tuesday, 20th January, 1903, at 8 P.M.

Mr WILLIAM FOULIS, President, occupied the Chair.

The Minutes of the Third General Meeting, held on Tuesday, 16th December, 1902, having been printed in the billet calling the Meeting, were held as read, and signed by the President.

The new Members elected at the previous Meeting were duly admitted.

Thereafter the discussion on Dr. J. BRUHN'S paper on "Some points in connection with the Riveted Attachments in Ships," was resumed and concluded.

On the motion of the President, Dr. Bruhn was awarded a vote of thanks for his paper.

The discussion on Mr WILLIAM THOMSON'S paper on "Circulation in Shell Boilers" was postponed.

The reading of Professor W. H. WATKINSON'S paper on "Notes

Relating to the de Laval Steam Turbine, the Wiredrawing Calorimeter, and the Superheating of Steam by Wiredrawing," was also postponed.

A paper by Mr C. A. MATTHEY on "The Dynamic Balance of the Connecting-Rod" was held as read.

The following candidates were duly elected—

AS MEMBERS.

COSTIGANE, A. PATON, Engineer, Messrs Crow, Harvey & Co., Kinning Park, Glasgow.

GRIGG, JAMES, Assistant Shipyard Manager, Fairfield Shipbuilding and Engineering Co., Govan.

MACNAMARA, JOSEPH, Engineer, Messrs J. W. Russell & Co., 50 Charles Street, St. Rollox, Glasgow.

SMITH, ROBERT BRUCE, Engineer, Messrs E. Chester & Co., Ltd., Renfrew.

WYNNE, ARTHUR A. W., M.A., Engineer, Messrs C. A. Parsons & Co., 99 Great Clyde Street, Glasgow.

From Students' Section.

CRIGHTON, JAMES, Engineer, Manager, Rotterdamsche Droogdok Maatschappig, Rotterdam, Holland.

INGLIS, JOHN FRANCIS, Shipbuilder, 46 Princes Terrace, Dowanhill, Glasgow.

AS ASSOCIATE MEMBERS.

LYNN, ROBERT RANKINE, Chemical Engineer, 7 Highburgh Terrace, Dowanhill, Glasgow.

ROBERTSON, JOHN, Jun., Engineering Draughtsman, 7 Maxwell Terrace, Shields Road, Pollokshields, Glasgow.

From Students' Section.

CRIGHTON, JOHN, Ship Draughtsman, 42 Stewartville Street, Partick.

AS STUDENTS.

DORMAN, JAMES F. A., Apprentice Engineering Draughtsman, 21 Minerva Street, Glasgow.

HAIGH, BERNARD PARKER, Student of Engineering, 6 Elmwood Gardens, Jordanhill, Glasgow.

THE FIFTH GENERAL MEETING was held in the Hall of the Institution, 207 Bath Street, Glasgow, on Tuesday, 17th February, 1903, at 8 P.M.

Mr JAMES MOLLISON, Vice-President, occupied the Chair.

The Minutes of the Fourth General Meeting, held on Tuesday, 20th January, 1903, having been printed in the billet calling the Meeting, were held as read, and signed by the Chairman.

The new Members elected at the previous Meeting were duly admitted.

Thereafter the discussion on Mr WILLIAM THOMSON's paper on "Circulation in Shell Boilers" was begun and terminated.

On the motion of the Chairman, Mr THOMSON was awarded a vote of thanks for his paper.

The discussion on Mr C. A. MATTHEY's paper on "The Dynamic Balance of the Connecting-Rod" was postponed.

Professor W. H. WATKINSON read a paper on "Notes Relating to the de Laval Steam Turbine, the Wiredrawing Calorimeter, and the Superheating of Steam by Wiredrawing."

The following candidates were duly elected—

AS MEMBERS.

DUNKERTON, ERNEST CHARLES, Engineer, 43 Caird Drive, Partickhill.

THOMSON, WILLIAM, Chemical Engineer, Royal Institution Laboratory, Manchester.

WATSON, JAMES WENTWORTH, Consulting Engineer, 6 Kirklee Road, Kelvinside, Glasgow.

AS ASSOCIATE MEMBERS.

ARDILL, WILLIAM, Engineer, 30 St. Vincent Crescent, Glasgow.

DRYSDALE, HUGH R. S., Electrical Engineering Draughtsman, 24 Kilmailing Terrace, Cathcart, Glasgow.

FALLON, ALFRED HENRY, Apprentice Naval Architect, Bellview, off Craigton Road, Govan.

KELLNER, OSSOKAR, Ship Draughtsman, Chapelton, Dumbarton.

MANNERS, EDWIN, Engineer, Chief Draughtsman, 50 M'Culloch Street, Pollokshields, Glasgow.

From Associate Section.

ANDERSON, JAMES, Engineering Draughtsman, c/o Masson, 26 Merryland Street, Govan.

From Students' Section.

MILLAR, WILLIAM PETTIGREW, Engineering Draughtsman, 4 Parkview Gardens, Tollcross, Glasgow

AS STUDENTS.

HOLMES, JAMES, Engineering Draughtsman, 25 St. James Street, Paisley.
M'LAY, JOHN ALEXANDER, Engineering Draughtsman, Rose Lea, Uddingston.
SCOTT, GEORGE NORMAN, Apprentice Engineer, 100 Bothwell St., Glasgow.
STEWART, DONALD, Apprentice Engineer, 125 Gt. Western Road, Glasgow.
YOUNG, JOHN M., Engineering Student, Ravenscraig, Ardrossan.

AN EXTRAORDINARY GENERAL MEETING was held in the Hall of the Institution, 207 Bath Street, Glasgow, on Tuesday, 3rd March, 1903, at 8 P.M.

Mr ARCHIBALD DENNY, Vice-President, occupied the Chair.

The Minutes of the Fifth General Meeting, held on Tuesday, 17th February, 1903, having been printed in the billet calling the Meeting, were held as read, and signed by the Chairman.

The new Members elected at the previous Meeting were duly admitted.

The discussion on Mr C. A. MATTHEY'S paper on the "Dynamic Balance of the Connecting-Rod" was begun and concluded.

On the motion of the Chairman, Mr MATTHEY was awarded a vote of thanks for his paper.

Thereafter the discussion on Professor W. H. WATKINSON'S paper on "Notes Relating to the de Laval Steam Turbine, the Wiredrawing Calorimeter, and the Superheating of Steam by Wiredrawing," was begun and terminated.

On the motion of the Chairman, Professor WATKINSON was awarded a vote of thanks for his paper.

Mr W. B. SAYERS read a paper on "Speed Control of Electric Motors when driven from Constant-Pressure Mains."

The following candidates were duly elected:—

AS MEMBERS.

PICKERING, JONATHAN, Consulting Engineer, 50 Wellington St., Glasgow.
ROBINSON, ROBERT, Engineer, 4 Meadowbank Crescent, Partick.
WILSON, SAMUEL, Engineer, 2 Whitehill Gardens, Dennistoun, Glasgow.

From Students' Section.

DOUGLAS, CHARLES STUART, B.Sc., Naval Architect, St. Brides, Dalziel Drive, Pollokshields, Glasgow.

HOUSTON, WILLIAM CAMPBELL, B.Sc., Engineer, 4 Abbotsford Place, Glasgow.

MORRISON, ARTHUR MACKIE, Engineer, Manager, Merchiston, Scotstoun, Glasgow, W.

AS ASSOCIATE MEMBERS.

COCHRAN, ALEXANDER, Shipbuilder, Messrs Burn & Co., Ltd., Howrah, Calcutta.

M'IVOR, JOHN, Engineering Draughtsman, Moss Cottage, Nitshill, Glasgow.

SHEARER, JAMES, Engineering Draughtsman, 30 M'Culloch Street, Pollokshields, Glasgow.

AS STUDENTS.

Ap.-GRIFFITH, YWAIN GORONWY, Student of Naval Architecture, 39 White Street, Partick.

GRENIER, JOSEPH REGINALD, Apprentice Civil Engineer, 352 St. Vincent Street, Glasgow.

JENKINS, CHARLES E., Apprentice Engineer, 100 Bothwell St., Glasgow.

SPROUL, JOHN, Engineering Draughtsman, c/o Park, 37 Wellmeadow St., Paisley.

YOUNGER, JOHN, Apprentice Engineer, Birch Bank, 88 Albert Road, Crosshill, Glasgow.

THE SIXTH GENERAL MEETING was held in the Hall of the Institution, 207 Bath Street, Glasgow, on Tuesday, 24th March, 1903, at 8 P.M.

Mr THOMAS KENNEDY, Vice-President, occupied the Chair.

The Minutes of the Extraordinary General Meeting, held on Tuesday, 3rd March, 1903, having been printed in the billet calling the Meeting, were held as read, and signed by the Chairman.

The new Members elected at the previous Meeting were duly admitted.

The following Nominations for Office-Bearers (Sessions, 1903-06) were then made:—

President, Mr ARCHIBALD DENNY. *Vice-Presidents*, Messrs W. M.

ALSTON, H. W. BROCK, E. HALL-BROWN, M. PAUL, and A. W. SAMPSON. *Members of Council from Class of Members*, Messrs WILLIAM BEARDMORE, THOMAS BELL, A. S. BIGGART, ALEXANDER CLEGHORN, DAVID COLVILLE, W. T. COURTIER-DUTTON, A. B. GOWAN, C. P. HOGG, JAMES MOLLISON, HENRY MECHAN, R. T. MOORE, B.Sc., A. T. REID, and A. W. STEWART. *Members of Council from Associate Class*, Messrs LAURENCE MACBRAYNE, and THOMAS PRENTICE.

Thereafter the discussion on Mr W. B. SAYERS' paper on "Speed Control of Electric Motors when driven from Constant-Pressure Mains," was resumed and concluded.

On the motion of the Chairman, Mr SAYERS' was awarded a vote of thanks for his paper.

A paper on "Tools and Gauges in the Modern Shop," was read by Mr H. F. L. ORCUTT, London.

The reading of Mr W. M. ALSTON's paper on "The Old Quay Walls of Glasgow Harbour," was postponed.

A paper on "Experimental and Analytical Results of a series of Tests with a Pelton Wheel," by Mr W. CAMPBELL HOUSTON, B.Sc., was held as read.

The following Candidates were duly elected:—

AS MEMBERS.

MORGAN, ROBERT, Brassfounder, Arnsbrae, Dumbreck.
NEILSON, JAMES, Engineer, Alma Boiler Works, Glasgow.
PAUL, JAMES, Engineer, Kirkton, Dumbarton.

From Students' Section.

MACKIE, WILLIAM, Chief Draughtsman, 3 Park Terrace, Govan.
MYLNE, ALFRED, Naval Architect, 108a Hope Street, Glasgow.

AS ASSOCIATE MEMBER FROM STUDENTS' SECTION.

STEVENSON, GEORGE, Mechanical Engineer, Hawkhead, Paisley.

AS A STUDENT.

THOMAS, NEVILL SENIOR, Engineer, 3 Church Road, Penarth, near Cardiff.

AN EXTRAORDINARY GENERAL MEETING was held in the Hall of the Institution, 207 Bath Street, Glasgow, on Tuesday, 21st April, 1903, at 8 P.M.

Mr WILLIAM FOULIS, President, occupied the Chair.

The Minutes of the Sixth General Meeting, held on Tuesday, 24th March, 1903, having been printed in the billet calling the Meeting, were held as read, and signed by the President.

The new Members elected at the previous Meeting were duly admitted.

Mr JAMES ROWAN and Mr ANGUS MURRAY were appointed to act as Scrutineers on the ballot for the election of Office-Bearers.

Mr WILLIAM BROWN, Convener of the Library Committee, announced that the work of preparing a new library catalogue was nearly complete, and that on and after 1st May, 1903, any Member might have a copy of the catalogue, free of cost, on application to the Secretary or Sub-Librarian.

Thereafter, the discussion on Mr H. F. L. ORCUTT's paper on "Tools and Gauges in the Modern Shop," was begun and concluded.

On the motion of the President, Mr ORCUTT was awarded a vote of thanks for his paper.

A paper on "The Old Quay Walls of Glasgow Harbour," by Mr W. M. ALSTON, was read.

The following Candidates were duly elected :—

AS A LIFE MEMBER.

DUNSMUIR, HUGH, Engineer, Govan Engine Works, Govan.

AS MEMBERS.

MCLAREN, RICHARD ANDREW, Engineer, Messrs Babcock & Wilcox, Ltd., Renfrew.

MAITLAND, CREE, Engineer, 190 West George Street, Glasgow.

From Students' Section.

BLAIR, FRANK ROBERTSON, Chief Draughtsman, Ashbank, Maryfield, Dundee.

BRAND, MARK, B.Sc., Mining Engineer, Barrhill Cottage, Twechar.

GRAHAM, JOHN, Engineer, 15 Armadale Street, Dennistoun, Glasgow.

ROY, WILLIAM, Engineer, 16 De Vere Gardens, Ilford, Essex.

AS ASSOCIATE MEMBERS.

GALLACHER, PATRICK, Mechanical Draughtsman, 72 Fulbar Steeet, Renfrew.

SAUL, GEORGE, Engineer, Yloilo Engineering Works, Yloilo, Phillipine Islands.

STEVENS, THOMAS, 55 Ferry Road, Renfrew.

From Students' Section.

BROWN, WILLIAM, Engineer, 22 Leven Street, Pollokshields, Glasgow.

FAUT, ALEXANDER, Ship Draughtsman, 120 Holland Street, Glasgow.

LEARMONTH, ROBERT, Engineer, c/o Drysdale, 590 Dalmarnock Road, Glasgow.

LE CLAIR, LOUIS J., Engineer, 115 Donore Terrace, South Circular Road, Dublin.

LEE, JOHN, Engineer, 10 Bisham Gardens, Highgate, London, N.

AS STUDENTS.

DUNSMUIR, GEORGE, Apprentice Engineer, Matheran, Dumbreck, Glasgow.

MCLACHLAN, CHARLES ALEXANDER, Engineering Draughtsman, 8 Queen's Crescent, Cathcart, Glasgow.

ROSS, THOMAS C., Junr., Engineering Draughtsman, 13 Hampden Terrace, Mount Florida, Glasgow.

The ANNUAL GENERAL MEETING was held in the Hall of the Institution, on Tuesday, 28th April, 1903, at 8 p.m.

Mr WILLIAM FOULIS, President, occupied the Chair.

The Minutes of the Extraordinary General Meeting, held on 21st April, 1903, having been printed in the billet calling the Meeting, were held as read, and signed by the President.

The new Members, elected at the previous Meeting, were duly admitted.

The following awards were made for papers read during the session 1901-02:—

1. A Premium of Books to Mr WILLIAM BROWN, for his paper on "Dredging and Modern Dredge Plant."

2. A Premium of Books to Mr A. MARSHALL Downie, B.Sc., for his paper on "The Design and Construction of Fly-Wheels for Slow-Speed Engines for Electric Lighting and Traction Purposes."

3. A Premium of Books to Mr J. FOSTER KING, for his paper on "Rudders."

The President then announced—1. That the Council had resolved to hold a Conversazione during the early part of next Session, and, 2. That the Council had received from Mr JAMES NAPIER a copy of the Original Contract for Cunard steamers, dated 18th March, 1839, and that they had decided that a print of this document should be embodied in the Volume of Proceedings for this Session.

Thereafter the discussion on the paper by Mr W. Campbell Houston, B.Sc., on "Experimental and Analytical Results of a series of Tests with a Pelton Wheel" was begun and concluded.

On the motion of the President, Mr Houston was awarded a vote of thanks for his paper.

Mr JAMES ROWAN and Mr ANGUS MURRAY, the Scrutineers appointed to examine the ballot papers for the election of Office-Bearers for ensuing Session submitted their report, and the Secretary announced that the following gentlemen had been duly elected:—*President*, Mr ARCHIBALD DENNY; *Vice-Presidents*, Mr W. M. ALSTON, Mr E. HALL-BROWN and Mr A. W. SAMPSON; *Members of Council from Class of Members*, Mr A. S. BIGGART, Mr A. CLEGHORN, Mr C. P. HOGG, Mr JAMES MOLLISON and Mr H. MECHAN; *Member of Council from Class of Associates*, LAURENCE MACBRAYNE.

The discussion on Mr W. M. ALSTON'S paper on "The Old Quay Walls of Glasgow Harbour" was then proceeded with and concluded.

On the motion of the President Mr ALSTON was awarded a vote of thanks for his paper.

The following Candidates were duly elected:—

AS MEMBERS.

FIFE, WILLIAM, Naval Architect, Messrs. William Fife & Sons, Fairlie, Ayrshire.

PARSONS, *The Hon.* CHARLES ALGERNON, M.A., Engineer, Holeyn Hall, Wylam-on-Tyne.

SPENCE, WILFRID L., Electrical Engineer, The British Electric Plant Co., Ltd., Alloa.

THISTLETHWAITE, JOHN DICKINSON, Mechanical Engineer, Brisbane, Queensland.

WILLCOX, REGINALD J. N., Engineer, General Manager, Messrs. Fleming & Ferguson, Ltd., Paisley.

From Students' Section.

FYFE, CHARLES FRANCIS ALEXANDER, Engineer, 8 Buckingham Terrace, Dundee.

KAY, ALEXANDER JAMES, Naval Architect, 21 Endsleigh Gardens, Partickhill Road, Glasgow.

MACDONALD, ROBERT COWAN, Engineer, Assistant Manager, Messrs. J. Marshall & Sons, Glasgow.

MACKINTOSH, JOHN, Engineer, 7 Park Quadrant, Glasgow.

RENNIE, ARCHIBALD, Marine Engineer, 7 Ratho Street, Greenock.

ROBERTSON, DAVID, B.Sc., Professor of Engineering, 16 Rokeby Avenue, Redland, Bristol.

AS AN ASSOCIATE MEMBER.

ADAM, JOHN WILLIAM, Engineer, Ferguslie Villa, Paisley.

From Students' Section.

AINSLIE, JAMES W., Engineer, 377 Bath Street, Glasgow.

ANDERSON, THOMAS, Engineer, 326 Cumberland Street, Glasgow.

BUCHANAN, WALTER GEORGE, Engineer, 17 Sandyford Place, Glasgow.

BUCKLE, JOSEPH, Engineer, Bennie Place, Renfrew.

CRAIG, JAMES, B.Sc., Engineer, Netherlea, Partick.

DUNLOP, ALEXANDER, Marine Engineer, 14 Derby Terrace, Sandyford, Glasgow.

FERNIE, JOHN, Engineer, 6 Edelweiss Terrace, Partickhill, Glasgow.

FROST, EVELYN F. M., Marine Engineer, 76 Hill Street, Garnethill, Glasgow.

HOWIE, WILLIAM, Engineer, Cathkin View, 14 Crossloan Road, Govan.

KIRK, JOHN, Draughtsman, Oakfield, University Avenue, Glasgow.

MCEWAN, JOHN, Marine Engineer, 3 Norse Road, Scotstoun, Glasgow.

MACKIE, JAMES, Marine Engineer, 407 St. Vincent Street, Glasgow.

MCLELLAN, ALEXANDER, Civil Engineer, Clyde Navigation Trust, 16 Robertson Street, Glasgow.

NOWERY, WILLIAM FERGUSON, Engineer, 46 Elderslie Street, Glasgow.

RIDDLESWORTH, WILLIAM HENRY, M.Sc., Naval Architect, 63 Polworth Street, Partickhill, Glasgow.

SMITH, JAMES, Engineer, 11 Broomhill Avenue, Partick.

SMITH, JAMES A , Engineer, Union Bank House, Virginia Place, Glasgow.

STOBIE, PETER, Engineer, 33 Kelvinhaugh Street, Glasgow.
WELSH, GEORGE MUIR, Engineer, 3 Princes Gardens, Dowanhill, Glasgow.

AS AN ASSOCIATE.

WILLIAMSON, JOHN, Managing Director of Turbine Steam Co., Ltd., 99 Great Clyde Street, Glasgow.

AS STUDENTS.

AITKEN, JOHN, Draughtsman, Beech Cottage, Balshagray Avenue, Partick.
SMITH, WILLIAM, Draughtsman, 13 Minerva Street, Glasgow.

REPORT OF THE COUNCIL.

Session 1901-1902.

The Council have pleasure in presenting to the Members the following report of the progress and work of the Institution during the past Session.

His Majesty the King has conferred the honour of Knighthood on Mr William Allan, M.P.; and that of Companion of the Bath on Sir James Williamson and Mr James Neilson. These gentlemen are members of the Institution.

The changes which have taken place in the Roll are shown in the following statement:—

Session 1900-1901.		Session 1901-1902.		Increase.
Honorary Members,	8	... ...	8	—
Members, ...	928	... ...	961	33
Associates, ...	85	... ...	90	5
Graduates, ...	353	... ...	338	- 15
	1374		1397	23

The Council records with regret the deaths of the following gentlemen:— Members—George M'L. Blair, Glasgow; George A. Clark, Glasgow; Daniel Ferguson, Glasgow; Thomas Hill, Glasgow; Frank M'Culloch, London; H. J. M'Dowall, Johnstone; Alfred Muir, Manchester; Alexander R. Paton, Partick; John Paton, Glasgow; William T. Philp, Belfast. Associates—Archibald M'Millan, Dalmuir; William Young, Glasgow. Graduates—Robert D. Cassells, B.Sc., Glasgow; Turner Dunn, Glasgow; Andrew M'Nair, Ayr.

The Meetings held during the Session were seven in number, at which the following papers were read and discussed:—

"The Design and Construction of Fly-wheels for Slow-Speed

Engines for Electric Lighting and Traction Purposes," by Mr A. Marshall Downie, B.Sc.

"Notes on the Serious Deterioration of Steel Vessels from the Effects of Corrosion," by Mr George Johnstone.

"Dredging and Modern Dredge Plant," by Mr William Brown.

"Gas and other Internal Combustion Engines," by Mr Dugald Clerk.

"Rudders," by Mr J. Foster King.

"Producer Gas and its Use in Engineering and Shipbuilding," by Mr F. J. Rowan.

"Some Considerations Affecting the Economy of Marine Screw Engines," by Mr E. Hall-Brown.

The Meetings held by the Graduates' Section were Six in number, at which the undermentioned papers were read and discussed:—

"The Preliminary Design of a Marine Engine," by Mr J. Imbrie Fraser, President of the Section.

"High Speed Engines," by Mr William Alexander.

"Engineering on the Pacific Coast," by Mr John Kemp, Wh.Sc.

"Motor Cars," by Mr James Reid.

"Some Features in Autocar Design," by Mr J. Pollock Brown.

"Armature Windings," by Mr David Robertson, B.Sc.

"Some Notes on a few Comparisons between the Rules of the Principal Shipping Registration Societies," by Mr Alexander J. Kay.

The Silver Medal for the best paper read in this Section was awarded to Mr David Robertson, B.Sc.

Board of Trade Consultative Committee.

The Institution was represented on the Board of Trade Consultative Committee by Mr James Denny, Mr John Duncan, Mr James Hamilton, and Mr James Weir.

During the year the Committee had a conference with the President of the Board of Trade. Two meetings were also held in

London, and it was arranged to hold two meetings in each year for general business and for the appointment of, and reception of reports from, sub-committees.

The Committee desire to point out that its usefulness would be much increased if engineers, shipbuilders, and shipowners would communicate with the Committee in all cases where they consider they have cause of complaint with the action of the Board of Trade.

Lloyd's Technical Committee.

The Institution was represented on Lloyd's Technical Committee by Mr Sinclair Couper, Mr James Gilchrist, Mr John Inglis, LL.D., and Mr John Ward.

The usual Consultative as well as the Statutory Meetings of the Committee, were held in London during the months of November, 1901, and March, 1902, and your representatives took part in the discussions and settlement of the various matters which came before the Technical Committee, and of which the following is a short summary:—

Testing of Steel.

Protection over after steering gears.

Riveting of landings in joggled shell plating.

,, round boss plates in large steamers.

Riveting in deep ballast tanks and fore and after peaks.

Special strengthening in ends of steamers having abnormal sheer.

Approval of Beardmore's corrugated furnace.

Depth and fastening of beam knees.

Beams covering engine and boiler openings.

Efficiency of engine and boiler casings in steam trawlers.

Filling appliances for deep ballast-tanks.

The decisions arrived at are embodied in the new edition of Lloyd's Register.

In conformity with the Rule that two of the four Members representing the Institution shall retire at the expiry of their term

of office, Mr James Gilchrist and Mr John Ward will shortly demit office, and are not eligible for re-election at that time.

Engineering Standards Committee.

The Institution was represented on the Sub-Committee on Ships' Sections by Mr A. M'A. Kennedy.

The Sub-Committee on Ships' Sections met frequently in London during the past year. The work undertaken was that of fixing lists of sections for all rolled material, namely, angles, bulb angles, bulb tees, bulb plates, channels and zeds, and on the completion of this part of the reference in July last, the Chairman transmitted the Sub-Committee's report to the Chairman of the Main Committee for consideration.

It may be interesting to state that the Sub-Committee is an exceedingly representative one, and has been recognised by the Government, having as members a representative from the Board of Trade and one from the Admiralty. It has also been similarly recognised by Lloyd's, Bureau Veritas, and the British Corporation Registration Societies. The other bodies represented are the Steel Ingot Makers' Association, the North East Coast Institution of Engineers and Shipbuilders, the Steel Merchants, and our own Institution, while the Chairman, Mr Archibald Denny, was nominated to the Main Committee by the Institution of Naval Architects.

The Sub-Committee are now taking up the second section of their work, namely, the standardisation of tests as applied to all iron and steel material used in the construction of ships and their machinery, and for this purpose it is proposed to still further strengthen the Committee by the addition of an Engineer rspresentative from each of the Government Departments and Registration Societies, the Institution of Naval Architects, the North East Coast Institution of Engineers and Shipbuilders, and our own Institution; and also by the inclusion of representatives of the Forgemasters.

Board of Governors of the Glasgow School of Art.

The Institution was represented on the Board of Governors of the Glasgow School of Art by Mr James Mollison.

The Glasgow School of Art now holds a most important position amongst the Higher Educational Institutions in this country, and is so recognised by the Scotch Education Department. That department has authorised the Governors to grant diplomas and certificates to students attending the school which it will accept as testimonials of professional capability.

Last session the number of students enrolled in the various classes were 873, or 96 over that of the previous session.

The students are representative of nearly every art and craft connected with the many industries throughout the country, and are carrying with them into their various avocations an influence which must lead to a higher standard of excellence in all manufactured products. Life classes, drawing and painting, for both male and female students, are held daily, and the organisation is the same as that which obtains in the most important schools of art in England and on the Continent.

Board of Governors of the Glasgow and West of Scotland Technical College.

The Institution was represented on the Board of Governors of the Glasgow and West of Scotland Technical College by Mr T. W. McIntyre until 3rd April, 1902, when he found it necessary to resign office because of the pressure of other duties. Mr James Weir was appointed to succeed him.

The work of the college during the session shows that the opportunities which it offers are taken advantage of to the utmost limit of the accommodation provided by the old buildings which it at present occupies.

The total number of day students last year was 596, and of evening students 4,394; the pupils of Allen Glen's School numbered 661, making a grand total of 5,651. It is of some interest to note that 1,417 of the evening students were employed

in engineering or shipbuilding works. The enrolment for the session commenced in September last was so large that some hundreds of evening students had to be refused admission.

Substantial progress has been made with the scheme for the erection of new buildings. The site has been cleared, and the work of excavation for the first section, comprising more than two-thirds of the whole structure, will be commenced immediately. This block, inclusive of the site but exclusive of equipment, will cost about £160,000.

The college has received a bequest of £500 from the late Colonel Montgomerie Neilson for the provision of a gold medal and prize, in memory of Mr J. Beaumont Neilson, for the best student each year completing the course for the Diploma in Mechanical Engineering.

The Council desire to express the thanks of the Institution to these gentlemen for their services on these bodies, and wishes to draw the attention of the members to the service which this Institution is able to render the country by the appointment of these representatives. The calls upon the Institution in this direction are likely to increase from year to year.

The Council have to report that their energies have been largely devoted this year to the revision of the Articles of Association. These have now been passed and confirmed by the Members, and in the opinion of the Council the new regulations will greatly improve the efficiency of the Institution's work.

The great increase of Members, and prospective still greater increase, called for a larger membership in the Council. It was also desirable that our Associates should have some voice in the management of the Institution, and it is believed that the representation upon the Council now granted them will have the effect of increasing their interest in the work done. Associates can render many valuable services to the Institution, and should join in the discussion of papers on practical points within their knowledge.

The large increase in membership has raised the consideration

of the housing of the Institution. The present building is in joint ownership of the Institution and the Royal Philosophical Society, an arrangement which, while both Societies had a small membership, was possible, but which now, as both Societies have largely increased in membership, requires serious consideration. It will be for the new Council to take this matter up.

The "James Watt" Dinner took its usual place as the social function of the Institution for the year. It was held in the Windsor Hotel, Glasgow, on Saturday evening, 18th January, 1902, and was well attended by members and friends.

The surplus revenue for the Session ending 30th September, 1902, as shown by the Treasurer's Statement appended hereto, is £240 9s 10d.

TREASURER'S
INCOME AND EXPENDITURE ACCOUNT
GENERAL

ORDINARY INCOME.			1901-1902.	1900-1901.
I. *Annual Subscriptions received—*				
858 Members at £1 10 0	£1287 0 0			
85 Associates ,, 1 0 0	85 0 0			
313 Graduates ,, 0 10 0	156 10 0			
			£1528 10 0	*£1496 0 0*
II. *Arrears of Subscriptions recovered, less expenses*			36 1 6	*114 17 0*
III. *Sales of Transactions,*			30 11 0	*45 11 6*
IV. *Interests and Rents—*				
Interest on Clyde Trust Mortgages for £400, less tax, ...	£11 8 10			*9 5 0*
Students' Institute C.E., for use of Library, ...	11 16 0			*12 3 9*
Interest on Deposit Receipts, *less* Income Tax, ...	5 2 5			*12 10 3*
			28 7 3	*[33 19 0]*
EXTRAORDINARY INCOME.				
Surplus from Conversazione, ...				*1 2 7*
Surplus from "James Watt" Dinner, ...				*1 3 3*
			£1623 9 9	*£1690 13 4*

STATEMENT.
FOR YEAR ENDING 30TH SEPTEMBER, 1902.
FUND.

ORDINARY EXPENDITURE.		1901-1902.	*1900-1901.*
I. *General Expenses*—			
Secretary's Salary, ...	£300 0 0		*£300 0 0*
Clerk's Salary, ...	56 18 0		
Institution's proportion of net cost of maintenance of Buildings, etc.	108 8 5		*150 18 10*
Interest on Medal Funds, until invested, ...	6 17 3		*21 12 0*
Library Books, ...	32 16 10		*24 1 2*
Binding Periodicals and Papers,	28 17 2		*9 12 6*
Stationery and Postages, etc.,	48 13 11		*44 15 11*
Office Expenses, ...	34 8 10		*43 6 2*
Advertising, Insurance, etc., ...	6 5 6		*7 16 0*
Assistance at Meetings, ...	. . .		*6 11 9*
		£623 5 11	*[608 14 4]*
II. "*Transactions*" *Expenses*—			
Printing and Binding,	£394 4 6		*367 15 7*
Lithography, ...	185 3 9		*117 18 2*
Postages, ...	74 16 7		*66 17 2*
Reporting, ...	15 3 6		*13 7 6*
Delivery of Annual Volume, ...	14 14 5		*12 10 0*
		684 2 9	*[578 8 5]*
III. *Awards*—Premiums for Papers, ...		5 2 6	*12 9 2*
EXTRAORDINARY EXPENDITURE.			
Deficit on "James Watt Dinner," ...	£19 8 9		
"Hammond" Typewriter, ...	21 0 0		
Library Catalogue, ...	30 0 0		
		70 8 9	*75 14 7*
Surplus carried to Balance Sheet, ...		240 9 10	*415 6 10*
		£1623 9 9	*£1690 13 4*

BALANCE SHEET, AS AT

LIABILITIES.			As at 30th Sept., 1902.	*As at 30th Sept., 1901.*
I. *General Capital Account*—				
Transferred from Building Fund,	£2329 10 1			
Transferred from General Fund,	1899 8 4			
As at 1st Oct., 1901		£4228 18 5		
Life Members' Subscriptions, ...	£60 0 0			
Life Associates' Subscriptions, ...	15 0 0			
Entry money, ...	39 0 0			
Surplus from Revenue, ...	240 9 10			
		354 9 10	4583 8 3	[*4228 18 5*]
II. *Sundry Creditors,*			10 0	*£620 7 1*
III. *Subscriptions paid in advance,*			32 10 0	*19 10 0*
IV. *Medal Funds*—				
Marine Engineering—				
Balance as at 1st Oct., 1901,	£540 17 7			
Interest received during year,	10 12 7			
		£551 10 2		*540 17 7*
Railway Engineering—				
Balance as at 1st Oct., 1901,	£338 6 5			
Interest received during year,	6 10 4			
		344 16 9		*338 6 5*
Graduates'—				
Balance as at 1st Oct., 1901,	£24 12 1			
Cost of medal, £1 7s 6d; *less* interest received during year, 16s 3d,	0 18 4			
		23 13 9		*24 12 1*
			920 0 8	[*903 16 1*]
			£5536 8 11	*£5772 11 7*

30TH SEPTEMBER, 1902.

ASSETS.				As at 30th Sept., 1902.	*As at 30th Sept., 1901.*
I. *Heritable Property*—					
Total Cost, £7094 16 3					
Of which one-half belongs to the Institution, ...				£3547 8 1	*£3547 8 1*
II. *Furniture and Fittings*—					
Valued at, say				65 10 0	*65 10 0*
III. *Books in Library*—					
Valued at, say				500 0 0	*500 0 0*
IV. *Investment*—					
Clyde Trust Mortgage, ...				400 0 0	*300 0 0*
V. *Medal Funds Investments*—					
Clyde Trust Mortgage, ...				903 0 0	
VI. *Arrears of Subscriptions*—					
Session 1901-1902—					
47 Members at £1 10/,		£70	10 0		
3 Associates at £1,		3	0 0		
35 Graduates at 10/,		17	10 0		
		£91	0 0		
Previous sessions—					
Members,	£25 0 0				
Associate,	1 0 0				
Graduates,	3 0 0				
		£29	0 0		
Total,		£120	0 0		
Valued at, say				50 0 0	*50 0 0*
VII. *Sundry Debtors*—				2 3 2	*12 6 4*
VIII. *Cash*—					
In Bank,					
On Current Account, ...		£23	0 9		
In Secretary's hands, ...		45	6 11		
				68 7 8	*1897 7 2*
				£5536 8 11	*£5772 11 7*

ABSTRACT OF "HOUSE EXPENDITURE" ACCOUNT FOR SESSION 1901-1902.

INCOME.		12 months, to 30th Sep., 1902.	*12 months, to 30th Sep., 1901.*
Rents for Letting Rooms, ...		£126 0 0	*£62 15 0*
Balance, being excess Expenditure, ...		216 16 10	*414 5 10*
Payable by Institution, ...	£108 8 5		
Payable by Philosophical Society,	108 8 5		
		£342 16 10	*£477 0 10*

EXPENDITURE.	12 months, to 30th Sep., 1902.	*12 months, to 30th Sep., 1901.*
Salary to Curator, ...	£135 0 0	*£135 0 0*
Salary to Attendant at Library, Cleaning, etc., ...	80 16 4	*67 7 10*
Feu-duty, Taxes, and Insurance.	49 4 1	*42 9 3*
Law Expenses, ...	13 0 2	
Alterations, Repairs & Renewals,	16 0 11	*156 0 3*
Coal, Gas, and Electric Light,	45 15 0	*44 2 10*
Stationery, Postages, and Incidental Expenses, ...	3 0 4	*2 0 3*
	£342 16 10	*£477 0 10*

Note.—The Account of the House Committee, of which the above is an abstract, is kept by Mr John Mann, C.A., Treasurer to the Committee, and is periodically audited by the Auditors appointed by the Institution and the Philosophical Society.

EDWARD H. PARKER, *Secretary to the House Committee.*

GLASGOW, *21st October, 1902.*—We have examined the foregoing Financial Statement of the Treasurer, the Accounts of the Marine and Railway Engineering Medal Funds, the Graduates' Medal Fund, and the "House Expenditure" Account, and find the same duly vouched and correct, the Amounts in Bank being as stated.

(Signed) F. J. ROWAN,
R. T. NAPIER, } AUDITORS.

REPORT OF THE LIBRARY COMMITTEE.

THE additions to the Library during the year include 42 volumes and 2 parts by purchase; 26 volumes and 1 part by donation; while 78 volumes and 121 parts were received in exchange for the Transactions of the Institution. Of the periodical publications received in exchange, 26 were weekly, and 15 monthly. Two hundred and twenty-six volumes were bound during the year, including 101 volumes of Illustrated Abridgments of Specifications of Patents.

The Library Committee desires to record its appreciation of the assistance it has received from Mr F. T. Barrett, City Librarian, by his advice, in the preparation of the new Library Catalogue. The writing of the slips has been completed, and as the copy is now in the hands of the printer, the Committee hope that the Catalogue will be ready shortly.

As the proceedings of the most important engineering societies are to be found in the Library of the Institution, the Committee begs to draw the attention of Members to the existence of this particular section.

The Institution possesses a complete set of the Abridgments of Specifications of Patents dating from 1617, which is available for reference purposes in the Library.

Donations to the Library.

Association of Assistant Engineers in Glasgow. Committee Minute Book, 1860. From Mr Robert Harvey.

Barker, H. A course of six lectures (with discussions) on the Management of Engineering Workshops, February to April, 1901. From Institution of Junior Engineers.

Beare, T. H. The Education of an Engineer: An Inaugural Lecture delivered at the University of Edinburgh, November, 1901. Pamphlet. From the Author.

Berly's Universal Electrical Directory, 1900-1901.

Brewer, Griffith and Alexander, P.Y., Aëronautics: an Abridgment. of Aëronautical Specifications filed at the Patent Office from 1815-1891. 1893. From Mr J. A. Brewer.

Brewer & Son. Property in Trade Marks. 1901. From Mr J. A. Brewer.

Brewer & Son. United States Motor-Cars: being an Index of Specifications of United States Patents issued on the Subject of Motor-Vehicles from 1860-1900. From Mr J. A. Brewer.

Electrical Trades' Directory, 1899.

Handbooks—British Association, Glasgow Meeting, 1901. Archæology, Education, Medical, and Charitable Institutions of Glasgow. Edited by Magnus Maclean. Glasgow, 1901.

Local Industries of Glasgow and the West of Scotland. Edited by Angus Maclean. Glasgow, 1901. From the Executive Committee.

Horner, J. G. English and American Lathes, 4to., 1900. From Mr James B. Reid.

International Engineering Congress: Meeting in Glasgow, 1901 Proceedings. Section I., Railways. Section II., Waterways and Maritime Works. 1902.

Lloyd's Register of Shipping (2 vols.); and 1 volume of Rules and Regulations, 1901-02. From Lloyd's Committee.

MacColl, Hector. Strength of Cylindrical Boiler Shells (From Transactions of the Institution of Engineers and Shipbuilders in Scotland, January, 1875). From the author.

MacColl, Hector. Shafting of Screw Steamers (From Transactions of the Institution of Engineers and Shipbuilders in Scotland, January, 1887). From the author.

MacColl, Hector. Universal Corrosion of Marine Machinery (From Proceedings of the Institution of Mechanical Engineers, July, 1896). From the author.

Macoun, John. Catalogue of Canadian Birds, Part I. Ottawa, 1900. From Geological Survey of Canada.

Murphy, W. S. Captains of Industry. Glasgow. From the Author.

Phillips, W. B., Texas Petroleum. Austin, 1900. From University of Texas Mineral Survey.

Proceedings of the Incorporated Municipal Electrical Association, 1901.

Queen's College, Galway; Calendar, 1901-02, and 1902-03.

Report on the Coals, Lignites, and Asphalt Rocks of Texas. 1902. From the University of Texas.

Sothern, J. W., Verbal Notes and Sketches for Marine Engineers. Second and Third editions. 1901-1902.

Thackeray, Sir Edward T., K.C.B., V.C. Biographical Notices of Officers of the Royal Bengal Engineers, 1900. From the Author.

Wannan, A. C., and Sothern, J. W., Elementary Questions, New and Revised, by the Board of Trade for Marine Engineers, 1901.

Books Added to the Library by Purchase.

Aitken, Thomas. Road Making and Maintenance; a Practical Treatise for Engineers, Surveyors, and others. 1900.

Busley, Carl. Marine Steam Engine; its Construction, Action, and Management. Translated by H. A. B. Cole. 3rd edition, Part 3, with Part 3 4to Atlas of Plates. Kiel, 1902.

Björling, P. R. Pumps and Pump Motors. 2 vols.; 4to. 1895.

Blair, A. A. Chemical Analysis of Iron. 3rd edition. Philadelphia, 1898.

Brassey's Naval Annual, 1902.

Butterfield, W. J. A. Gas Manufacture: The Chemistry of. 2nd edition, 1898.

Chatelier, H. Le, and O. Boudouard. High Temperature Measurements. Translated by G. K. Burgess. New York, 1901.

Clark, D. K. Manual of Rules, Tables, and Data for Mechanical Engineers. 7th edition, 1897.

Dalby, W. E. Balancing of Engines. 1902.

Fidler, T. C. Practical Treatise on Bridge Construction. 3rd edition. 1901.

Gillespie, W. M., and Staley Cady. Treatise on Surveying. 2 vols. 1901.

Goldingham, A. H. Design and Construction of Oil Engines, with full directions for Erecting, Testing, Installing, Running, and Repairing. 1900.

Graham, John. Elementary Treatise on the Calculus for Engineering Students. 2nd edition, 12 mo., 1900.

Harcourt, L. F. Vernon. Civil Engineering, as applied in Construction. 1902.

Hutton, F. R. Mechanical Engineering of Power Plants. New York, 1901.

Hutton, F. R. Heat and Heat Engines. New York, 1899.

James, Alfred. Cyanide Practice. 4to. 1902.

Kemp, Dixon. Manual of Yacht and Boat Sailing. 9th edition. 1900.

Kent, William. Steam Boiler Economy. New York, 1901.

Lupton, Arnold, Practical Treatise on Mine Surveying. 1902.

Merrett, H. S. Practical Treatise on the Science of Land and Engineering Surveying, Levelling, Estimating quantities, etc. 5th edition, with an Appendix by G. W. Ushil. 1897.

Peters, E. D. Modern Copper Smelting. 11th edition. New York, 1901.

Pullen, W. W. F. Experimenting Engineering, Vol. I.: a Treatise on the Methods and Instruments used in Testing and Experimenting with Engines, Boilers, and Auxiliary Machinery. Manchester, 1900.

Rankine, W. J. M. Manual of Applied Mechanics. 16th edition, 1901.

Rankine, W. J. M. Manual of Civil Engineering. 21st edition, 1900.

Rankine, W. J. M., and Bamber, E. F. Mechanical Text-Book: or Introduction to the Study of Mechanics. 5th edition, 1900.

Rankine, W. J. M. Manual of the Steam Engine. 14th edition, 1897.

Rankine, W. J. M. Useful Rules and Tables. 7th edition, 1899.

Richardson, M. T. Practical Blacksmithing. 4 vols., New York, 1899.

Robertson, L. S. Water-tube Boilers, based on a short course of lectures delivered at University College, London, 1901.

Sexton, A. H. The Chemistry of Materials of Engineering. Manchester, 1900.

Sharp, John. Modern Foundery Practice. 1900.

The Engineering Index, 1896-1900.

Thearle, S. J. P. Theoretical Naval Architecture. Vol. II. Plates and Tables.

Walton, Thomas, Steel Ships; their Construction and Maintenance. 1901.

White, Sir W. H. Manual of Naval Architecture. 5th edition. 1900.

Year-Book of the Scientific and Learned Societies of Great Britain and Ireland. 1901.

The Institution Exchanges Transactions with the following Societies, etc.:—

Aberdeen Association of Civil Engineers, Aberdeen.

American Institute of Electrical Engineers.

American Institute of Mining Engineers, New York.

American Philosophical Society.

American Society of Civil Engineers, New York.

American Society of Mechanical Engineers, New York.

Association des Ingénieurs des Écoles Spèciales de Gand, Belgium.

Association Technique Maritime, Paris.

Austrian Engineers' and Architects' Society, Wien.

Bristol Naturalists' Society, Bristol.

British Association for the Advancement of Science, London.

Bureau of Steam Engineering, Navy Department, Washington.

Canadian Institute, Toronto.

Canadian Society of Civil Engineers, Montreal.
Edinburgh Architectural Association.
Engineering Association of New South Wales, Sydney.
Engineering Society of the School of Practical Science, Toronto.
Engineers' and Architects' Society of Naples, Naples.
Franklin Institute, Philadelphia, U.S.A.
Geological Survey of Canada, Ottowa.
Hull and District Institution of Engineers and Naval Architects, Hull.
Institute of Marine Engineers, London.
Institution of Civil Engineers, London.
Institution of Civil Engineers of Ireland, Dublin.
Institution of Junior Engineers, London.
Institution of Mechanical Engineers, London.
Institution of Naval Architects, Japan.
Institution of Naval Architects, London.
Iron and Steel Institute, London.
L'Association Technique Maritime, Paris.
Liverpool Engineering Society, Liverpool.
Literary and Philosophical Society of Manchester, Manchester.
Lloyd's Register of British and Foreign Shipping, London.
Magyar Mérnök es Épitesz-Egylet, Budapest.
Manchester Association of Engineers, Manchester.
Midland Institute of Mining, Civil, and Mechanical Engineers. Barnsley.
Mining Institute of Scotland, Hamilton.
North-East Coast Institution of Engineers and Shipbuilders, Newcastle-on-Tyne.
North of England Institute of Mining and Mechanical Engineers, Newcastle-on-Tyne.
Patent Office, London.
Royal Dublin Society, Dublin.
Royal Philosophical Society of Glasgow.
Royal Scottish Society of Arts, Edinburgh.
Sanitary Institute of Great Britain, London.

Schiffbautechnischen Gesellschaft, Berlin.
Scientific Library, U.S. Patent Office, Washington, U.S.A.
Shipmasters' Society, London.
Smithsonian Institution, Washington, U.S.A.
Société d'Encouragement pour l'Industrie Nationale, Paris.
Société des Ingénieurs Civils de France, Paris.
Société des Sciences Physiques et Naturelles de Bordeaux, Bordeaux.
Société Industrielle de Mulhouse, Mulhouse.
Society of Arts, London.
Society of Arts, Massachusetts Institute of Technology, Boston.
Society of Engineers, London.
Society of Naval Architects and Marine Engineers, New York, U.S.A.
South Wales Institute of Engineers, Cardiff.
Technical Society of the Pacific Coast, San Francisco, U.S.A.
West of Scotland Iron and Steel Institute, Glasgow.

Copies of the Transactions are forwarded to the following Colleges, Libraries, etc.:—

Advocates' Library, Edinburgh.
Bodleian Library, Oxford.
British Corporation for the Survey and Registry of Shipping, Glasgow.
British Museum, London.
Cornell University, Ithaca, U.S.A.
Coatbridge Technical School.
Dumbarton Free Public Library, Dumbarton.
Glasgow and West of Scotland Technical College, Glasgow.
Glasgow University, Glasgow.
Lloyd's Office, London.
Mercantile Marine Service Association, Liverpool.
M'Gill University, Montreal.
Mitchell Library, Glasgow.
Royal Naval College, Greenwich.
Stevens Institute of Technology, Hoboken, U.S.A.
Stirling's Library, Glasgow.
Trinity College, Dublin.

Underwriters' Rooms, Glasgow.
Do. Liverpool.
University College, London.
University Library, Cambridge.
Yorkshire College, Leeds.

Publications Received periodically in Exchange for Institution Transactions :—

American Machinist.
American Manufacturer and Iron World.
Automotor and Horseless Vehicle Journal.
Cassier's Magazine.
Colliery Guardian.
Contract Journal.
Engineer.
Engineering.
Engineering Magazine.
Engineering Times.
Engineering and Mining Journal, New York.
Engineers' Gazette.
Feilden's Magazine.
Indian Engineering.
Iron and Coal Trades' Review.
Iron and Steel Trades' Journal.
Journal de l'École Polytechnic.
L'Industria.
Light Railway and Tramway Journal.
Machinery Market.
Marine Engineer.
Marine Engineering.
Mariner.
Mechanical Engineer.
Mechanical World.
Nature.
Nautical Gazette.

Portefeuille Économique des Machines.
Practical Engineer.
Revue Industrielle.
Scottish Electrician.
Shipping World.
Stahl und Eisen.
Steamship.
The Indian and Eastern Engineer.
Tramway and Railway World.
Transport.

The Library is closed for the Summer Holidays from the 11th July till 31st July inclusive.

Except during holidays and Saturdays, the Library is open each lawful day from 1st May till 30th September inclusive, from 9.30 A.M. till 5 P.M. On Saturdays the Library is open from 9.30 A.M. till 1 P.M.

On the 1st October and thereafter throughout the Winter Session the Library will be open each lawful day from 9.30 A.M. till 8 P.M., except on Meeting Nights of the Institution and Royal Philosophical Society, when it is open till 10 P.M., and on Saturdays, when it is closed at 2 P.M.

Members have the privilege of consulting the Books in the Library of the Royal Philosophical Society.

The use of the Library and Reading Room is open to Members, Associates, and Graduates.

The Portrait Album lies in the Library for the reception of Members' Portraits. Members are requested when forwarding Portraits to attach their Signatures to the bottom of Carte.

The Library Committee are desirous of calling the attention of Readers to the "Recommendation Book," where entries can be made of titles of books suggested as suitable for addition to the Library.

A List of the Papers read and Authors' Names, from the First to the Thirty-Third Sessions, will be found in Vol. XXXIII. of the Transactions.

As arranged by the Council, a Register Book for Graduates now lies in the Library for the inspection of Members, the object being to assist Graduates of the Institution in finding suitable appointments.

R. T. MOORE,
Hon. Librarian and Convener.

Annual Subscriptions are due at the commencement of each Session; viz.:—

MEMBERS, £2; ASSOCIATE MEMBERS, £1; ASSOCIATES, £1 10s; STUDENTS, 10s; LIFE MEMBERS, £25; LIFE ASSOCIATES, £20.

Membership Application Forms can be had from the Secretary or from the Sub-Librarian, at the Rooms, 207 Bath Street.

The Council, being desirous of rendering the transactions of the Institution as complete as possible, earnestly request the co-operation of Members in the preparing of Papers for reading and discussion at the General Meetings.

Early notice of such papers should be sent to the Secretary, so that the dates of reading may be arranged.

Copies of the reprint of Vol. 7 containing a paper on "The Loch Katrine Water Works," by Mr J. M. Gale, C.E., may be had from the Secretary; price to Members, 7/6.

Members of this Institution, who may be temporarily resident in Edinburgh, will, on application to the Secretary of the Royal Scottish Society of Arts, at his office, 117 George Street, be furnished with billets for attending the meetings of that Society.

The Meetings of the Royal Scottish Society of Arts are held on the 2nd and 4th Mondays of each month, from November till April, with the exception of the 7th Monday of December.

OBITUARY.

Members.

WILLIAM AITCHISON was born in the year 1844, at Calder, near Coatbridge. He served his apprenticeship with Messrs William Dixon, Limited, at Calder, and eventually became their engineer at Govan Iron Works, Glasgow. He afterwards spent many years as consulting engineer on sugar estates in Demerara and Mauritius. He died very suddenly at Glasgow on 9th October, 1902.

Mr Aitchison became a Member of the Institution in 1899.

THOMAS ARTHUR ARROL was born in Glasgow on the 24th August, 1852, and was educated at the Collegiate and High Schools of Glasgow, and at the Glasgow University. He served his time as an engineer with Messrs P. & W. MacLellan and remained in their service till he became general manager. After spending a few months in the United States he returned to his native city and entered into partnership with his brother, the late Mr James Cameron Arrol. Together they founded the Germiston Works, at which roof and bridge building and general engineering were carried on until 1892. The concern was subsequently converted into a Limited Company under the designation of Arrol's Bridge & Roof Co., Ltd., with Mr T. Arthur Arrol as managing director. Under his supervision many important contracts were successfully carried out, and among others in hand at the time of his death were those for the Connel Ferry Bridge, which is the second largest cantilever bridge in Europe; the Larkhall and Stonehouse viaducts for the Caledonian Railway; and the transporter bridge across the Mersey at Runcorn, which is the first of its kind in Britain.

He died suddenly at Aberdeen on 29th October, 1902.

Mr Arrol joined the Institution as a Member in 1875, and took an active interest in its affairs. He was a Member of Council for Sessions 1882-84, and a Vice-President for Sessions 1884-86. He was again elected a Member of Council in April, 1901.

GEORGE A. CLARK was born in South India in 1873, and received his early education in a public school in Glasgow and at Ayr Academy. Leaving the latter, he studied at the Glasgow and West of Scotland Technical College for two years, and then went as an apprentice with Messrs Crow, Harvey & Co., engineers. On the completion of his apprenticeship he entered the Glasgow University, where he obtained a scholarship, and spent some time under Lord Kelvin in the electrical laboratory. He also served in Kelvin & White's works, and afterwards took charge of the outside work at Messrs Mavor & Coulson, Ltd. In 1898 he started in business with Messrs M'Aulay & M'Laren under the title of M'Aulay, Clark & M'Laren, electrical engineers.

On the evening of 11th November, 1901, when returning to his residence at Dullatur, he met his death by being run down by the Edinburgh express train while walking along the railway, which was a short route to his home.

Mr Clark joined the Institution as a Member in 1898.

THOMAS DAVISON was born at Laragh, Ireland, on the 22nd May, 1822, where his father had a linen mill and bleachfield. After leaving school, he entered his father's business, and from John Crawford, millwright, in the employ of his father, he acquired a knowledge of the use of tools. In 1842, Mr Davison went to New York to join an elder brother, who was in business there, as an importer of Irish linen. This brother died the following year and Mr Davison entered the drawing office of the "Novelty" Engineering works in New York, and subsequently became manager. While acting in that capacity, the

steamers of the Collins' Line, one of the first of the American transatlantic lines, were built at the "Novelty" Engineering works.

In 1859, having purchased from the patentee, Mr Sewell, the British rights in his surface condenser for marine engines, Mr Davison returned to this country, where he fitted this type of condenser to many vessels built at Glasgow, London, and Liverpool. He always personally superintended the adaptation of each individual condenser, and to this he attributed the success of the patent, for which he obtained a prolongation after the expiry of its original term.

From 1871 to 1873 Mr Davison was manager of Messrs Robert Napier & Sons, but preferring to be less closely tied to Glasgow, he, from that time, undertook the business of a consulting engineer. He acted for some time as consulting engineer to the owners of the Castle Line of steamers and also for the Leith, Hull & Hamburg line. For a number of years he was a director of the British and African Steam Navigation Company, only resigning when, in 1900, the business was transferred to the new company.

Mr Davison, whose tastes were scientific, was a Fellow of the Microscopical Society, of which, at the time of his death, he was one of the oldest members. He died at Glasgow on 10th December, 1902.

Mr Davison joined the Institution as a Member in 1861.

JOHN DEMPSTER was born at Dumfries on 24th May, 1832, where he served his apprenticeship. In 1852 he went to Glasgow and entered the employ of Mr George Bennie, ironfounder, leaving six years later to join the staff of Messrs P. & W. M'Lellan & Co. He severed his connection with that firm in 1873, at the same time as his colleague Mr Moore—and the two started business in Robertson Street, Glasgow, under the designation of Dempster, Moore & Co., as iron and steel merchants, and engineers and machinists.

Mr Dempster was actively engaged in this business up to the

time of his death which took place at Pollokshields on 20th April, 1902.

Mr Dempster joined the Institution as a Member in 1898.

CHARLES R. DÜBS was born at Manchester, on 8th December, 1850. When nine years of age, he left that city for Glasgow, where he received his education. Mr Dübs became a partner of the firm of Dübs & Co., locomotive engineers, on the death of his father, in 1876, and remained in the firm until it became merged in the North British Locomotive Co., Ltd. Of the latter company he was a director at the time of his death. He died suddenly at his country house, Craigdarroch, Moniaive, Dumfriesshire, on 19th July, 1903.

Mr Dübs was elected a Member of the Institution in 1882.

DANIEL FERGUSON was born in Glasgow on 2nd November, 1838. Shortly after, his parents removed to Johnstone, where his boyhood was spent, his father being employed in the cotton mills. His apprenticeship was served with Messrs Hopkins & Bell, Greenhead Engine Works, and with Mr Andrew Bowie, engineer, Cheapside Street, Glasgow.

In 1859 Mr Ferguson entered the Royal Navy, as an engineer, and served, among other commissions, on H.M.S. "Nile," on the North American Station; on H.M.S. "Donegal," at Liverpool; on H.M.S. "Myrmidon," on the west coast of Africa; and on H.M.S. "Hotspur." He was invalided from the Navy in February, 1875, while still a senior engineer. Returning to Glasgow, he went into business, on his own account, as a consulting engineer. He died on 20th July, 1902.

Mr Ferguson joined the Institution as a Member in 1898.

WILLIAM FOULIS was born at St. Andrews in 1838, where his

father at the time was manager of the gas works. In 1850 his father left the little "grey city" for Paisley, to take charge of the gas works in that town. Two years later the school days of his son terminated, and, at the age of fourteen years, the subject of this sketch was entered as an apprentice in the engineering works of Messrs Craig, Fullerton & Co., Paisley. At the close of his apprenticeship he studied at the Glasgow University under Professor Rankine, and on leaving the University entered the service of the late Mr Walter Montgomerie Neilson, of Hyde-park Locomotive Works, Glasgow. Later, he was engaged by Mr George Croll, of London, one of the foremost gas engineers of his time, to proceed with the erection of gas works at Malta and different towns in Italy and Greece.

After a lapse of seven years he returned to Scotland and entered into partnership with Mr W. R. Copland, the firm carrying on business as civil and gas engineers. When it was decided to municipalise the gas supply of Glasgow, Mr Foulis was employed by the Corporation as adviser, and on the completion of the scheme in 1869, he was appointed gas engineer. In that capacity he acted for 34 years, during which time he worked assiduously to make this department of Glasgow municipal enterprise a success, and introduced many improvements into the manufacture of gas.

In conjunction with Sir William Arrol he patented and constructed a machine for charging retorts with raw coal and withdrawing the coke after the gas had been extracted. This machine is worked by hydraulic power, the water being also used to cool the shovel of the charger and the rake of the drawer. Another improvement introduced by Mr Foulis was the application of the heat regenerative system of Dr C. W. (subsequently Sir William) Siemens, F.R.S., to the carbonisation of coal in gas retorts, and so complete was the success of this innovation that within the past twenty or twenty-five years the system has been adopted by gas engineers in all parts of the world.

When Mr Foulis became the Corporation gas engineer for Glasgow there were four works in actual operation, three within

the city, at Dalmarnock, Townhead, and Tradeston respectively, and the other at Partick. The last mentioned works was subsequently closed. Soon after entering upon his duties he designed and erected the works at Dawsholm, which has recently been greatly enlarged; but his crowning work was the planning of Glasgow's great gas scheme at Provan, the total cost of which is estimated at close upon a million sterling. When completed the works will be in four sections, covering altogether 131 acres; each section will be capable of manufacturing twelve million cubic feet of gas per day, or a total of forty-eight million cubic feet.

In contributing an appreciation of Mr Foulis to the "Gas World" Sir George Livesey wrote—"I doubt whether the citizens of Glasgow ever fully realised their indebtedness to Mr Foulis. By his wise conduct and management of their gas undertaking he saved them hundreds of thousands of pounds; for it was only because they had a man like him at the head of their gas undertaking that they enjoyed for so many years an efficient gas supply at a low price. When in the early nineties he induced the Glasgow Gas Committee to reduce the illuminating power of the gas supply from 26 candles to 21 candles he did a good days' work for Glasgow, and, I may say, for the gas industry generally."

Mr Foulis was in manner reserved; he was a man of deeds rather than of words; a man who understood his business; thorough and painstaking in all he undertook. He was successively president of the North British Association of Gas Managers, the British Association of Gas Managers, and the Institution of Gas Engineers, while at the time of his death, which took place on the 29th June, 1903, he was president of the Institution of Engineers and Shipbuilders in Scotland, having been elected to that office on the 23rd April, 1901.

Mr Foulis joined the Institution as a Member in 1870.

William Hastie, of the firm of Messrs John Hastie & Co., engineers, Greenock, was the eldest son of the late Mr John

Hastie. When about sixteen years of age, he entered a solicitor's office in Greenock, where he remained for some time, subsequently becoming an assistant to his father at the Deerpark Engine Works. In that capacity he laboured until the destruction of the works by fire, when he joined the firm of Messrs Robertson & Co., shipbuilders, Greenock, and after three years service returned to the Deerpark Engine Works in partnership with his brother John.

About the year 1873, the firm removed their business to the Kilblain Engine Works in Nicholson Street, and in 1898 the concern was formed into a Limited Liability Company. Mr Hastie was well known in engineering and business circles in Glasgow and Greenock, and was held in high esteem by all with whom he came into contact. During his life he devoted himself to religious and philanthropic work, especially among the young, and was the founder, in 1869, of the Greenock Working Boys' and Girls' Religious Society. He died at Greenock, from heart failure, on 8th March, 1903.

Mr Hastie was elected a Member of the Institution in 1871.

THOMAS HILL was born at Glamis, Forfarshire, in 1846. He commenced his professional career as an apprentice with Messrs Forrest & Barr. He was in the service of Messrs J. Copland & Co., engineers, Port-Dundas, for about eighteen years; and afterwards with the Howe Machine Co. At the construction of the Forth Bridge he acted as superintendent of the hydraulic machinery, and subsequently became manager of the New Howe Machine Co., Ltd. In 1892 he started the business of Thomas Hill & Co., consulting engineers. He died on the 4th September, 1902.

Mr Hill joined the Institution as a Member in 1895.

JOHN HODGART, chairman of Fullerton, Hodgart & Barclay, Ltd,, engineers & ironfounders, Paisley, died suddenly at his residence, Paisley, on the 28th November, 1902, in his sixty-first

year. He was well known in engineering circles in the West of Scotland and took a very active interest in the Engineering Employers' Federation, having been chairman of the North-West Engineering Trades Employers' Association. He did not identify himself in a prominent manner with public questions, but was deeply interested in, and took an active part in the various philanthropic associations of his town. He was one of the first directors of the Paisley Technical College, and was also a director of the Royal Alexandra Infirmary, and the Royal Victoria Eye Infirmary, Paisley, and in these capacities he rendered splendid services to his community. He was a Justice of the Peace for Renfrewshire.

Mr Hodgart was elected a Member of the Institution in 1896.

MATTHEW HOLMES was born in Paisley, and early in life went to the East Country along with his father, who had been appointed foreman of the Edinburgh and Glasgow Railway Company's Works at Haymarket. In Edinburgh he received his education, and on leaving school at the age of 15 he became apprenticed to Messrs Hawthorne & Co., engineers, Leith. In 1859 he followed his father into the service of the Edinburgh and Glasgow Railway Company. Here he manifested that mechanical skill, intelligent grasp of business details, and ready command of men which subsequently won for him his high position. At the age of 29 he was appointed foreman over his department, and he held that post for ten years. The Edinburgh and Glasgow Railway Company became absorbed by the North British Railway Company, and in 1875 the latter company appointed Mr Holmes chief inspector of their line, while he also acted as assistant at Cowlairs to Mr Drummond, in conjunction with whom he designed the powerful engines which brought the North British Company into the forefront in railway enterprise. In 1882 Mr Holmes succeeded Mr Drummond as locomotive superintendent, thereby becoming the

responsible head of an industrial army of nearly 7,000 men. A locomotive superintendent's duties are varied. He is manager of the locomotive works, in which are built and repaired the engines, carriages, and waggons required for the service, while as superintendent of the running department he examines and appoints engine-drivers, firemen, and shunters, regulates their hours of labour and rates of pay, and supervises the time-tables and the expenditure on oil and coal and repairs. These diverse duties Mr Holmes continued to discharge with faithfulness and distinct ability until he retired from service with honours in the beginning of May, 1903, giving place to Mr W. P. Reid. Mr Holmes was held in the highest esteem alike by his superiors and those under him. He died of heart disease at Netherby, Lenzie, on the 3rd of July, 1903, in the 67th year of his age.

Mr Holmes joined the Institution as a Member in 1883, and took a keen interest in its affairs. He served as a Member of Council during Sessions 1884-89, 93-95, and 98-1900, and was a Vice-President for Sessions 1896-98.

Guybon Hutson was born at Manchester, on 28th September, 1836. His father, William Hutson, died young, and the earnings of Guybon, an only son, were, at a tender age, required to supplement the somewhat scanty resources of his widowed mother. He spent some time at calico printing, but his natural bent was engineering to which he served an apprenticeship with Messrs Niven & Smith; Mr Niven being a near relative of his mother. Shortly after his time was out, he found employment with Messrs Barclay, Curle & Co., subsequently gaining a leading position with that firm. In 1875, in conjunction with Messrs Alexander Manderson and Andrew Corbett, he started the firm of Manderson, Hutson & Corbett. On the retiral of Mr Manderson, the name of the firm was changed to Hutson & Corbett, and again, on the retiral of Mr Corbett—and after Mr Guybon Hutson, junr., had been assumed a partner—to that of Hutson & Son, under

which name the firm was better known and had a most successful career. Eventually the firm was converted into a Limited Company, with Mr Hutson as governing director.

Mr Hutson had exceptional opportunities and facilities, some forty years ago, for studying the results of different types of marine propellers, and he attained a somewhat more than local reputation as a designer and maker of propellers in which his firm did a large business.

He died in Glasgow on 31st December, 1902.

Mr Hutson joined the Institution as a Graduate in 1873, and became a Member in 1885.

ROBERT MCMASTER was born at Newton-on-Ayr in the year 1839, and served an apprenticeship as a ship carpenter at the Ayr Shipbuilding Yard. Shortly after, he entered the employment of Messrs Alexander Stephen & Sons, when their establishment was at Kelvinhaugh. About ten years later, he was appointed manager of their shipbuilding yard, and in 1889, he was assumed a partner of the firm. Mr McMaster was one of the best known and most highly respected shipyard managers in the Clyde district. He died from pleurisy on the 28th October, 1902.

Mr McMaster joined the Institution as a Member in 1890.

Mr ANDREW PAUL was born in 1834 at Thornliebank, where his father, Matthew Paul, was employed on Messrs Crum's mechanics' staff. He was educated at Dalmonach School in the Vale of Leven, during the time his father was mechanic at Dalmonach & Ferryfield Print Works. Levenford Engine Works, Dumbarton, were founded by Matthew Paul in 1847, and Andrew Paul served his apprenticeship in the works, thereafter becoming a partner. On the conversion of the business into a Limited Liability Co. in 1898, he became Chairman.

He was a J.P. for the County of Dumbarton, and President of the Dumbarton Liberal Association. He died in Glasgow on 24th June, 1903.

Mr Paul was elected a Member of the Institution in 1877.

WILLIAM TAYLOR PHILP was born in Glasgow in 1855. He served his apprenticeship as an engineer with Messrs John & James Thomson, Finnieston, Glasgow, in whose employment he was for the space of 19 years, and for some time occupied the position of chief draughtsman. He left Messrs Thomson in 1899, and went to Messrs Laird Bros., Birkenhead, with whom he stayed for about one year, leaving there to take charge of the engine drawing office of Messrs Workman, Clark & Co., Ltd., Belfast, who were then just starting to build their own engines. Mr Philp carried through the designing of the new engine works, and when that was completed, gathered round him a staff to proceed with the design of the engines for the orders in hand. The difficulties of this will be appreciated when it is understood that there were no drawings of the firm's previous practice to work upon, and the staff being drawn together from all parts of the kingdom, each member had his own different idea of details and proportions.

About seven years ago the works were partly destroyed by a fire which originated in Messrs Harland & Wolff's establishment, and although the offices were saved, a lot of extra thought and labour were entailed in the reconstruction and reorganisation of the premises. About this time Mr Philp's health showed signs of breaking down, but his strong will carried him through an illness during which his life was despaired of, and he was once more able to resume his duties. It was soon apparent, however, that his frame, never very robust, had sustained a severe shock, and in a year or two he was glad to be relieved of his onerous and responsible position to take up the less exacting role of estimating draughtsman, which place he continued to hold till his death in July, 1902.

He stuck to his post when it was apparent to those around him that he was gradually wearing away. He was the victim of a malignant internal disorder from which he suffered, more or less, continuously and painfully for about six years. Had his strength permitted, it is almost certain that Mr Philp would have risen to the very top of his profession. He loved his work, but from his youth his health was precarious, and he had, on the very eve of an examination for a Whitworth Scholarship, to retire, worn out nature rising in rebellion against undue pressure. In his earlier years Mr Philp was a keen volunteer, and gained several prizes as a first rate shot. His early death in his 47th year was a source of great grief to his many friends, by whom he was much loved for his genial manner.

Mr Philp joined the Institution in 1881. He was for some years a painstaking office-bearer in the Graduates' section, and became a Member in 1891.

THOMAS B. SEATH, whose death occurred at Langbank, on 3rd February, 1903, was for nearly fifty years one of the most familiar figures in business circles in Glasgow. He was born at Prestonpans in 1820, and when about eight years of age his parents removed to Glasgow. On leaving school at the age of fourteen he joined the steamer on which his father was employed. Most of his sea life was spent in trading between Glasgow and Liverpool, and passing through the various necessary grades he obtained a captain's certificate.

For some time Mr Seath was connected with one of the Arran steamers, and he then made the acquaintance of the Prince who afterwards became Napoleon III., and who was a repeated visitor to the Duke of Hamilton at Brodick Castle. It has been said of the last Napoleon that, like his great kinsman Napoleon Bonaparte, he never forgot an acquaintance; and Mr Seath used to tell how, when on a visit to Paris many years afterwards, the

Emperor observed him outside the Palace of the Tuileries, sent for him, entertained him well, and spoke with enthusiasm of his early and pleasant experiences on the Firth of Clyde.

The chief ambition of Mr Seath was to become a shipbuilder, and this was realised in 1853, when he established a yard at the mouth of the Kelvin, on the spot where Messrs D. & W. Henderson's establishment now stands. Here, however, he remained only three years, and then removed further up the Clyde to Rutherglen, where he founded the yard so long and honourably identified with his name.

Among the earlier craft built at Rutherglen was the small steamer "Artizan," which Mr Seath placed, in 1856, on what was called the "Upper Navigation" of the Clyde, the vessel plying, with her builder as captain, between the Old Weir at Glasgow Green and Rutherglen Quay. The "Artizan" was sold for service on the Lakes of Killarney, and was succeeded by other small vessels launched from the Rutherglen yard, which were in turn disposed of to home or foreign owners; and in course of time Mr Seath established a reputation for building such vessels, many of which found their way to distant parts. His firm designed and built most of the "Cluthas," which for a series of years have plied in Glasgow harbour.

In private life Mr Seath was esteemed for his genial qualities, and he was possessed of great intelligence, much shrewdness, and a ready wit. He made one or two essays in literary composition, among his productions being the libretto of a comic opera entitled "How I found Livingstone," in which the parts of Gordon Bennett of the *New York Herald*, and his reporter, Mr Stanley (now Sir Henry M. Stanley), were pourtrayed with considerable satirical force, the music being adapted by Mr Seath, chiefly from Scottish and American airs. Mr Seath was altogether a remarkable man. An accident in infancy doomed him to decrepitude, but he nevertheless displayed unusual mental and physical activity during a long and successful career.

Mr Seath became a Member of the Institution in 1860.

WILLIAM SIMONS was the eldest of the three sons of Mr William Simons, and was born at Greenock in 1821. In 1810, his father started shipbuilding at Greenock under the title of William Simons & Co., and except for an interval of about five years, the firm having transferred their headquarters to Montreal for that period, carried on business there till 1839. The establishment was situated on the site now occupied by the Victoria harbour, and there the subject of this memoir obtained a practical training in the various branches of shipbuilding. In 1839 the works were removed to Whiteinch, and from that time till 1848 the Shipbuilding business was carried on by Mr Simons and his brother, in behoof of their father's trustees. Twenty-one years later Mr Simons entered into partnership with Mr Andrew Brown and the business was transferred to the London works, Renfrew. There dredge and barge building was specialized and developed until it became the chief feature of the works and synonymous with William Simons & Co.

In 1861 they constructed the first steam hopper-barge built in this country, for the Clyde Navigation Trustees; and they built the first hopper-dredger, in 1872, for the Canadian Government. Of notable work done, it may be sufficient to mention, that in 1861 the firm constructed the river paddle steamer, "Rothesay Castle," which was designed by Mr Simons. She attained the remarkable speed of 20¼ miles per hour, and this is not greatly exceeded even at the present time in vessels of this class. This vessel was afterwards used as a blockade runner during the American Civil war, and very recently, under the name of "Southern Belle," was one of the favourite steamers on Lake Ontario. Mr Simons was also a noted designer of sailing yachts. In conjunction with Mr Andrew Brown he introduced the elevating deck ferry steamer, the first vessel of this description being the "Finnieston," constructed for the Clyde Navigation Trustees.

Owing to failing health, Mr Simons severed his connection with business about fifteen years ago, and retired to his residence at Tighnabruach, Kyles of Bute, where he died on 26th October, 1892.

Mr Simons was elected a Member of the Institution in 1858.

JAMES M. THOMSON was a son of Mr James Thomson, founder of the famous shipbuilding firm of Messrs James and George Thomson, which still survives, not in name, however, but as part of the firm of Messrs John Brown & Co., Ltd., Clydebank, the new name having been adopted on amalgamation. Mr Thomson was born at Glasgow, on 5th December 1843, and was educated at the Glasgow Academy. On the conclusion of his studies, he was apprenticed to engineering with his father's firm. In 1864 his father retired from business and Mr Thomson entered the service of the Messrs Caird at Greenock, where he was associated with the design and construction of several important liners. Four years later he joined his brother, Mr John Thomson, in business at the Finnieston Engine Works, the firm being known as John & James Thomson. During the twenty-two years occupancy of these premises, the two brothers constructed the propelling machinery for many well-known steamers. This establishment, from which they retired in 1891, was afterwards leased to, and occupied by, Messrs Barclay, Curle, & Co., Ltd., as was also the boiler works at Kelvinhaugh.

On relinquishing business, Mr Thomson entered the Glasgow Town Council, for what is now known as the Kelvinside Ward, which he represented at the time of his death. He was a magistrate of the city from 1895 till 1899.

He passed away very suddenly on 4th February, 1903, at his Ayrshire residence, Montgomerie, Tarbolton.

Mr Thomson became a Member of the Institution in 1868.

JOHN TURNBULL, Jr., was born in Glasgow on 4th August, 1841, and received his education in various schools in the city. He acquired his early training as an engineer under his father at the Canal Basin Foundry, Port-Dundas. Completing his apprenticeship, he went to London with two friends and started a pattern-making business which was very successful, and is carried on to this day by one of the original partners. Severing his connection with this

concern, he volunteered for, and fought under, Garibaldi, in the ever memorable campaign which resulted in the freeing of Italy. On his return again to Glasgow, he was taken into partnership with Messrs Turnbull, Grant & Jack, Port-Dundas. In 1877 he opened an office in Buchanan Street, Glasgow, and made a speciality of steam engine work and water motors. He soon acquired a very large connection, and was a recognised expert in steam and water power; indeed, most of the largest industrial water power installations in this country were designed by him. In the interests of his business he traversed many countries; and was frequently employed by the Higher Courts as a technical arbiter.

Mr Turnbull had a particular regard for politics in general, and was widely known as the Speaker of the Glasgow Parliamentary Debating Association—a post he held with dignity and tact for twenty-five years. For his services to that Association, he was presented by the members with a full sized portrait in oils and an illuminated address. He compiled for local Parliamentarians "The Speaker's Handbook;" and was also the author of "A Short Treatise on the Compound Engine," the "Engineer's Guide Book," "Arithmetical questions," and "On Water Wheels and Turbines."

Mr Turnbull took an interest in art matters and was an original member of the Glasgow Pen and Pencil Club, and the Glasgow Art Club; and was also a Vice-President of the Institute of Consulting Engineers in Scotland. His death, which took place on the 14th January, 1903, was due to heart failure.

Mr Turnbull was elected a Member of the Institution in 1875.

JAMES COWAN WOODBURN was born in Glasgow, in 1870, and received his education at the Kelvinside Academy. Having acquired a liking for the study of electrical science, he resolved to follow its pursuit and entered the service of Messrs Mavor & Coulson, electrical engineers, Glasgow. He subsequently became

electrician to the Steel Company of Scotland, and while with them, most of his time was devoted to the application of electricity in the welding of steel. Leaving that firm he accepted the position of electrical engineer to Messrs John Findlay & Co., Glasgow. In 1901 he started in business for himself, and his wide experience and sterling qualities as a man, were gradually gaining for him a steady increase in business.

Mr Woodburn suffered for about two years from dyspepsia and decided, in April, 1903, to undergo an operation, as a result of which he died on 1st May, 1903. Always more or less of an athlete, he took a keen interest in football and for many years was an enthusiastic player in the Rugby team of the Kelvinside Academicals, and played in one of the international matches. He also took an active interest in church affairs and was an elder in the Anniesland United Free Church.

Mr Woodburn joined the Institution as a Member in 1900.

Associates.

JOHN BRYCE was born in Greenock in 1818, where he received his early education. He started life as a plumber, and in 1846 founded the firm of John Bryce & Son, Plumbers, Glasgow. Thirty years later he retired from business, and died at Dunoon on 20th January, 1902.

Mr Bryce was elected an Associate of the Institution in 1865.

JAMES RITCHIE was born at Riccarton in 1853, and after leaving school, he entered the service of the Fairfield Shipbuilding and Engineering Co. and eventually became secretary to the principal of that firm. He left the Fairfield Co. to take up an appointment with Messrs Neilson Bros. & Co., iron merchants. In 1881 Mr Ritchie started in business on his own account as an iron and steel merchant. He died at Stewarton on 5th April, 1903, of pneumonia.

Mr Ritchie was elected an Associate of the Institution in 1898.

HUGH WALLACE was born on 13th February, 1836, at Cross Roads, in the parish of Dreghorn. At the age of 16 he went to Glasgow, and shortly thereafter became a clerk in the Union Boiler Works, North Street. He remained there till 1862, when he began business as a boilermaker in Lancefield Street. About four years later he removed to Havelock Street Boiler Works, Cranstonhill, where he continued in business as a boilermaker till 1892. In that year he retired and became agent of the new Sandyford branch of the Bank of Scotland.

He took an active part in public affairs, and was a member of the Town Council from 1883 till 1898; for the last nine years of that period he was a Clyde Trustee. He was also a J.P. of Lanarkshire. On his retiral from the Town Council he was elected for three years "Bailie of Provan," an honorary and complimentary appointment, in testimony of the esteem in which he was held by his former fellow councillors. On 2nd March, 1903, he took suddenly ill in the bank, and died the same day at his residence, Ainslie, Scotstounhill.

Mr Wallace joined the Institution as an Associate in 1897.

Graduates.

ROBERT DUNLOP CASSELLS who was born in Pollokshields, Glasgow, on 9th May, 1872, received his education under Mr Christie, Collegiate School, Queen's Park, Glasgow. He served his apprenticeship with Messrs James Howden & Co., during which time he attended classes in the Technical College for three years. Afterwards he attended the University for three years to study scientific engineering and took his degree of B.Sc. He then spent one year in Lord Kelvin's laboratory, subsequently spending two years in London to gain further knowledge and experience in electrical engineering. When there he served in Messrs Johnston & Philips' and other electrical engineering works. Returning to Glasgow, he entered the Corporation electrical works, where he was for two-and-a-half years, after which he

commenced business on his own account as a contractor. He was between four and five years in business at the time of his death, which occurred on 27th December, 1901.

Mr Cassells joined the Institution as a Graduate in 1890.

ANDREW M'VITAE was born in Kircudbrightshire, and served an apprenticeship with his uncle at Earlston. He filled various positions in well-known engineering firms in the Clyde district, including Messrs Matthew Paul & Co., Dumbarton, Messrs John & James Thomson and Messrs William Beardmore & Co. He died at Glasgow on 11th April, 1902.

Mr M'Vitae became a Graduate of the Institution in 1886.

LIST OF HONORARY MEMBERS, MEMBERS, ASSOCIATE MEMBERS, ASSOCIATES, AND STUDENTS

AT CLOSE OF SESSION 1902-1903.

HONORARY MEMBERS.

	DATE OF ELECTION.
KELVIN, Lord, A.M., LL.D., D.C.L., F.R.SS.L., and E., Netherhall, Largs,	1859
BRASSEY, Lord, K.C.B., D.C.L., 4 Great George street, Westminster, London, S.W.,	1891
BLYTHSWOOD, Lord, Blythswood, Renfrewshire,	1891
KENNEDY, Professor A. B. W., LL.D., F.R.S., 17 Victoria street, London, S.W.,	1891
MURRAY, Sir DIGBY, Bart., Hothfield, Parkstone, Dorset,	1891
WHITE, Sir WILLIAM HENRY, K.C.B., F.R.S., LL.D., D.Sc., Cedar Croft, Putney Heath, London, S.W.,	1894
DURSTON, Sir A. J., K.C.B., Westcomlea, Park Road, Blackheath, London, S.E.,	1896
FROUDE, R. E., F.R.S., Admiralty Experiment works, Gosport,	1897
GALE, JAS. M., 18 Huntly Gardens, Kelvinside, Glasgow,	1902

MEMBERS.

	DATE OF ELECTION.
AAMUNDSEN, JENS L., 57 Classensgade, 2 Sal, Copenhagen, Denmark,	24 Jan., 1899
ABERCROMBIE, ROBERT GRAHAM, Broad Street Engine Works, Alloa,	21 Mar., 1899
ADAM, J. MILLEN, Ibrox Iron works, Glasgow,	G. 25 Mar., 1890 M. 22 Jan., 1895
ADAMSON, JAMES, St. Quivox, Stopford road, Upton Manor, Essex,	23 Apr., 1889
ADAMSON, PETER HOGG, 11 Fairlie park drive, Partick,	19 Mar., 1901
AILSA *(The most Honourable the Marquis of)*, Culzean castle, Maybole,	25 Jan., 1898

Names marked thus * were Members of Scottish Shipbuilders' Association at Incorporation with Institution, 1865.

Names marked thus † are Life Members.

AITKEN, H. WALLACE, 140 Bath Street, Glasgow, { G. 24 Jan., 1888 / M. 24 Jan., 1899

AITON, J. ARTHUR, Western Works, Hythe Road, Willesden Junction, London, N.W., 24 Nov., 1896

ALEXANDER, JOHN, Engineer, Barrhead, 19 Mar., 1901

ALLAN, ROBERT, La Maisonette, Mount Cochen, Jersey, 30 Apr., 1895

ALLAN, Sir WILLIAM, M.P., Scotia Engine works, Sunderland, 20 Jan., 1869

ALLEY, STEPHEN E., 8 Woodside terrace, Glasgow, 23 Nov., 1897

†ALLIOTT, JAMES B., The Park, Nottingham, 21 Dec., 1864

ALSTON, WILLIAM M., 24 Sardinia terrace, Hillhead, Glasgow, { G. 15 Feb., 1865 / M. 18 Dec., 1877

†AMOS, ALEXANDER, Glen Alpine, Werris Creek, New South Wales, 21 Dec., 1886

†AMOS, ALEXANDER, Jun., Braeside, 81 Victoria Street (North), Darlinghurst, Sydney, New South Wales, 21 Dec., 1886

†ANDERSON, E. ANDREW, c/o Clinton, 13 Holmhead street, Glasgow, 21 Feb., 1899

ANDERSON, F. CARLTON, c/o Messrs. E. Selby Bigge & Co., 53 Bothwell street, Glasgow, 23 Apr., 1901

ANDERSON, J. GODFREY, B.Sc., c/o Messrs James Templeton & Co., Greenhead, Glasgow, 19 Mar., 1901

ANDERSON, JAMES, Princes Dock Engine works, Fairley street, Govan, { G. 24 Feb., 1874 / M. 23 Nov., 1880

†ANDERSON, JAMES, Ravelston, Great Western Road, Glasgow, 26 Nov., 1901

ANDERSON, JAMES H., Caledonian Railway, Glasgow, 20 Dec., 1892

ANDERSON, ROBERT, Clyde Street, Renfrew, 26 Jan., 1897

ANDERSON, WILLIAM MARTIN, Princes Dock Engine works, Fairley street, Govan, 18 Dec., 1900

ANDERSON, WILLIAM SMITH, Alderwood East, Port-Glasgow, 21 Nov., 1899

ANDREWS, H. W., 128 Hope street, Glasgow, { A. 21 Dec., 1897 / M. 24 Oct., 1899

ANDREWS, JAMES, Blythswood Chambers, 180 West Regent street, Glasgow, 22 Nov., 1898

ANGUS, ROBERT, Lugar, Old Cumnock, Ayrshire, 28 Nov., 1860

ANIS, Professor MOHAMED, Bey, Ministère des Travaux Publics, Cairo, 24 Apr., 1894

ARCHER, W. DAVID, 47 Croham road, Croyden, Surrey, 20 Dec., 1887

ARNOT, WILLIAM, 79 West Regent street, Glasgow, 23 Jan., 1894

ARNOTT, HUGH STEELE, 99 Clarence drive, Hyndland, Glasgow, { G. 26 Oct., 1897 / M. 22 Jan., 1901

ARROL, THOMAS, Jun., Oswald gardens, Scotstounhill, Glasgow, 20 Nov., 1894

†ARROL, Sir WILLIAM, LL.D., M.P., Dalmarnock Iron works, Glasgow, 27 Jan., 1885

AULD, JOHN, Whitevale foundry, Glasgow, 28 Apr., 1885
AUSTIN, WM. R., 28 Ardgowan Street, Greenock, 23 Feb., 1897

BAILLIE, ROBERT, c/o Stirling Boiler Company, Limited, 75 Bath street, Glasgow, 20 Nov., 1900
BAIN, WILLIAM N., 40 St. Enoch square, Glasgow, 24 Feb., 1880
BAIN, WILLIAM P. C., Lochrin Iron works, Coatbridge, 28 Apr., 1891
BAIRD, ALLAN W., Eastwood villa, St. Andrew's drive, Pollokshields, Glasgow, 25 Oct., 1881
BALDERSTON, JAMES, Anchor mills, Paisley, 25 Jan., 1898
BALDERSTON, JOHN A., Vulcan Works, Paisley, 18 Dec., 1900
BALFOUR, GEORGE, Messrs J. G. White & Co., Ltd., 22a College hill, Cannon street, London, E.C., 21 Mar., 1899
BALLINGALL, DAVID, c/o Messrs. Richard Hornsby & Son, Ltd., Spittlegate Iron Works, Grantham, 27 Oct., 1896
BAMFORD, HARRY, M.Sc., The University, Glasgow, 24 Nov., 1896
BARCLAY, GEORGE, Vulcan works, Paisley, 25 Jan., 1898
BARMAN, HARRY D. D., 21 University avenue, Glasgow, G. 24 Apr., 1888; M. 24 Oct., 1899
BARNETT, J. R., Westfield, Crookston, 22 Dec., 1896
BARNETT, MICHAEL R., Engineer's Office, Laurel Bank, Lancaster, 22 Nov., 1887
BARR, Professor ARCHIBALD, D.Sc., Royston, Dowanhill, Glasgow, 21 Mar., 1882
BARR, JOHN, Glenfield Company, Kilmarnock, A. 28 Oct., 1883; M. 25 Jan., 1898
BARROW, JOSEPH, Messrs Thomas Shanks & Co., Johnstone, 19 Feb., 1901
BAXTER, GEORGE H., Clyde Navigation works, Dalmuir, 22 Mar., 1881
BAXTER, P. M'L., Copland works, Govan, G. 22 Dec., 1885; M. 15 June, 1898
BEARDMORE, JOSEPH, Parkhead Forge, Glasgow, 27 Oct., 1896
BEARDMORE, JOSEPH GEORGE, Parkhead Forge, Glasgow, 22 Nov., 1898
BEARDMORE, WILLIAM, Parkhead forge, Glasgow, 27 Oct., 1896
BEGBIE, WILLIAM, P.O. Box 459, Johannesburg, South Africa, 15 June, 1898
*†BELL, DAVID, 19 Eton place, Hillhead, Glasgow,
BELL, IMRIE, 49 Dingwall road, Croydon, Surrey, 23 Mar., 1880
BELL, STUART, 65 Bath street, Glasgow, 26 Feb., 1895
BELL, THOMAS, Messrs John Brown & Co., Ltd., Clydebank, G. 26 Apr., 1887; M. 27 Apr., 1897
BELL, W. REID, Headquarters, Railway Pioneer Regiment, Johannesburg, South Africa, 22 Jan., 1889
BENNIE, H. OSBOURNE, Clyde Engine works, Cardonald, Glasgow, 25 Jan., 1898

BENNIE, JOHN, Auldhousfield, Eastwood, Pollokshaws, 22 Feb., 1898

BERGIUS, W. C., 77 Queen street, Glasgow, 23 Jan., 1900

BEVERIDGE, RICHARD JAMES, 53 Waring street, Belfast, 22 Feb., 1898

BIGGART, ANDREW S., 279 Nithsdale road, Pollokshields, Glasgow, G. 20 Mar., 1883; M. 25 Nov., 1884

BILES, Professor JOHN HARVARD, LL.D., The University, Glasgow, 25 Mar., 1884

BINNEY, WILLIAM H., Marine Superintendent, Holyhead, 26 Jan., 1897

BINNIE, R. B. JARDINE, Carntyne Works, Parkhead, 24 Dec., 1901

BIRD, JOHN R., 10 Morrison street, Glasgow, 25 Mar., 1890

BISHOP, ALEXANDER, 3 Germiston street, Glasgow, G. 24 Mar., 1885; M. 24 Jan., 1899

BLAIR, DAVID A., Scotland street Copper works, Glasgow, 23 Mar., 1897

BLAIR, FRANK R., Ashbank, Maryfield, Dundee, G. 22 Mar., 1892; M. 21 Apr., 1903

BLAIR, GEORGE, B.Sc., 16 Albert road (East), Crosshill, Glasgow, 21 Nov., 1899

BLAIR, GEORGE, Jun., 38 Queen street, Glasgow, G. 22 Jan., 1884; M. 23 Feb., 1897

BLAIR, H. MACLELLAN, Obbe, Skye, G. 22 Jan., 1884; M. 22 Oct., 1889

BLAIR, JAMES M., Williamcraigs, Linlithgowshire, 27 Mar., 1867

BONE, WILLIAM L., Ant and Bee works, West Gorton, Manchester, 23 Oct., 1883

BORROWMAN, WILLIAM C., Strathmore, West Hartlepool, G. 27 Oct., 1887; M. 26 Oct., 1895

BOST, W. D. ASHTON, Adelphi house, Paisley, 25 Jan., 1898

BOW, WILLIAM, Thistle works, Paisley, 27 Jan., 1891

BOWSER, CHARLES HOWARD, Charles street, St. Rollox, Glasgow, 21 Mar., 1899

BOYD, WILLIAM, The Tharsis Sulphur and Copper Co., Ltd., Hebburn-on-Tyne, 24 Oct., 1899

BRACE, GEORGE R., 25 Water street, Liverpool, 25 Mar., 1890

BRAND, MARK, B.Sc., Barrhill cottage, Twechar, Kilsyth, G. 24 Jan., 1888; M. 21 Apr., 1903

BREINGAN, W. D., Barns place, Clydebank, 22 Jan., 1901

BREWER, J. ALFRED, 249 West George street, Glasgow, 20 Nov., 1900

BRIER, HENRY, 1 Miskin road, Dartford Kent, 22 Dec., 1891

BROADFOOT, JAMES, Lymehurst, Jordanhill, G. 23 Dec., 1873; M. 22 Jan., 1884

BROADFOOT, WILLIAM R., Inchholm works, Whiteinch, 25 Jan., 1898

BROCK, HENRY W., Engine works, Dumbarton, 30 Apr., 1895

*BROCK, WALTER, Engine works, Dumbarton, 26 Apr., 1865

BROCK, WALTER, Jun., Levenford, Dumbarton, 27 Oct., 1896

BROOM, THOMAS M., 11 Union street, Greenock, 25 Apr., 1893

BROWN, ALEXANDER D., Dry Dock, St. John's, Newfoundland, 22 Dec., 1896

BROWN, ALEXANDER T., 18 Glencairn drive, Pollokshields, Glasgow, G. 25 Feb., 1879; M. 27 Oct., 1891

*†BROWN, ANDREW, London works, Renfrew, 16 Feb., 1859

BROWN, ANDREW M'N., Strathclyde, Dalkeith avenue, Dumbreck, Glasgow, G. 25 Jan., 1876; M. 24 Nov., 1885

BROWN, EBENEZER HALL-, Helen street Engine works, Govan, G. 18 Dec., 1883; M. 26 Feb., 1895

BROWN, GEORGE G., Garvel Graving Dock, Greenock, 23 Mar., 1886

BROWN, JAMES, c/o Messrs. Scott & Co., Greenock, G. 26 Oct., 1886; M. 26 Jan., 1892

BROWN, JAMES D., Rosebank Iron Works, Edinburgh, 29 Oct., 1901

BROWN, JAMES M'N., 15 Falkland Mansions, Hyndland, Glasgow, 26 Jan., 1897

BROWN, MATTHEW T., B.Sc., 233 St. Vincent street, Glasgow, G. 25 Jan., 1881; M. 18 Dec., 1894

BROWN, ROBERT, 7 Church road, Ibrox, Glasgow, 18 Feb., 1902

BROWN, WALTER, Monkdyke, Renfrew, 28 Apr., 1885

BROWN, WILLIAM, Meadowflat, Renfrew, G. 27 Jan., 1874; M. 22 Jan., 1884

BROWN, WILLIAM, Albion works, Woodville street, Govan, 21 Dec., 1880

BROWN, WILLIAM, Messrs Dübs & Co., Glasgow Locomotive works, Glasgow, 17 Dec., 1889

BROWN, WILLIAM DEWAR, 22 Ranelagh villas, Hove, Sussex, 25 Mar., 1890

BRUHN, JOHANNES, D.Sc., 49 Sydenham park, Sydenham, London, G. 24 Oct., 1893; M. 22 Feb., 1898

BRYSON, WILLIAM ALEXANDER, 16 Charlotte street, Leith, 27 Oct., 1896

BUCHANAN, JOHN H., 5 Oswald street, Glasgow, 23 Jan., 1900

BUCKWELL, GEORGE W., Board of Trade Surveyor's Office, Barrow-in-Furness, 27 Apr., 1897

BUDENBERG, CHRISTIAN FREDERICK, 31 Whitworth street, Manchester, 20 Dec., 1898

BULLARD, E. P., Jun., Bridgeport, Conn., U.S.A., 29 Oct., 1901

BURDEN, ALFRED GEORGE NEWKEY, c/o Messrs Harvey & Co., Box 953, Johannesburg, South Africa, 20 Feb., 1900

BURT, THOMAS, 60 St. Vincent crescent, Glasgow, 22 Mar., 1881

BUTTERS, MICHAEL W., 20 Waterloo street, Glasgow, 24 Oct., 1899

BUTTERS, JAMES THOMAS, Percy Crane & Engine Works, Glasgow, 19 Mar., 1901

CAIRD, ARTHUR, Messrs Caird & Co., Ltd., Greenock, 27 Oct., 1896

†CAIRD, EDWARD B., 777 Commercial road, Limehouse, London, 29 Oct., 1878

†CAIRD, PATRICK T., Messrs Caird & Co., Ltd., Greenock, 27 Oct., 1896

CAIRD, ROBERT, LL.D., Messrs. Caird & Co., Ltd., Greenock, 20 Feb., 1894

CALDERWOOD, WILLIAM T., Stanley villa, Kilmailing, Cathcart, 25 Jan., 1898

CALDWELL, JAMES, 130 Elliot street, Glasgow, 17 Dec., 1878

CAMERON, ANGUS, c/o Messrs W. Denny & Bros., Dumbarton, 18 Feb., 1902

CAMERON, DONALD, 7 Bedford circus, Exeter, 25 Feb., 1890

CAMERON, JOHN B., 111 Union street, Glasgow, 24 Mar., 1885

CAMERON, WILLIAM, Ashgrove, Whitehaugh drive, Paisley, 25 Mar., 1890

CAMPBELL, DUNCAN, Carntyne foundry and Engineering works, Parkhead, Glasgow, 23 Jan., 1900

CAMPBELL, HUGH, The Campbell Gas Engine Company, Halifax, Yorkshire, 18 Dec., 1900

CAMPBELL, JAMES, 104 Bath street, Glasgow, 18 Dec., 1900

CAMPBELL, JOHN, 8 Broomhill drive, Partick, 21 Jan., 1890

†CAMPBELL, THOMAS, Maryhill Iron works, Glasgow, 20 Nov., 1900

CAMPBELL, WALTER HOPE, 42 Krestchatik, Kieff, South Russia, 25 Apr., 1899

CAREY, EVELYN G., 4 Sunnyside avenue, Uddingston, 22 Oct., 1889

CARLAW, ALEX. L., 11 Finnieston street, Glasgow, 24 Dec., 1895

CARLAW, DAVID, Jun., 11 Finnieston street, Glasgow, 24 Dec., 1895

CARLAW, JAMES W., 11 Finnieston street, Glasgow, 24 Dec., 1895

CARMICHAEL, ANGUS T., 3 Harvey street, Paisley road, W., Glasgow, 19 Mar., 1901

CARRUTHERS, JOHN H., Ashton, Queen Mary avenue, Crosshill, Glasgow, 22 Nov., 1881

CARVER, THOMAS, A. B., B.Sc., 118 Napiershall street, Glasgow, 19 Feb., 1901

CHALMERS, WALTER, 24 Claremont Gardens, Milngavie, 23 Jan., 1900

CHAMEN, W. A., 75 Waterloo street, Glasgow, 22 Feb., 1898

CHISHOLM ROBERT, 1 Albany quadrant, Springboig, Shettleston, 29 Oct., 1901

CHRISTIE, JOHN, Corporation Electricity Works, Brighton, 22 Nov., 1898

CHRISTIE, R. BARCLAY, Messrs M'Lay & M'Intyre, 21 Bothwell street, Glasgow, 25 Apr., 1893

CHRISTISON, GEORGE, 13 Cambridge drive, Glasgow, 22 Feb., 1898

CLARK, JAMES LESTER, Dublin Dockyard Company, Northwall, Dublin, 24 Nov., 1896

CLARK, JOHN, British India Steam Navigation Co., 9 Throgmorton avenue, London, E.C., 23 Jan., 1883

CLARK, WILLIAM, 208 St. Vincent street, Glasgow, 25 Apr., 1893

CLARK, WILLIAM, Companhia Carris de Ferro de Lisbon, Lisbon, Portugal, 22 Dec., 1896

CLARK, WILLIAM GRAHAM, 29 Church road, Waterloo, Liverpool, 22 Feb., 1898

CLARKSON, CHARLES, 20 Macaulay road, Birkby, Huddersfield, 27 Oct., 1891

CLEGHORN, ALEXANDER, 10 Whittinghame drive, Kelvinside, Glasgow, 22 Nov., 1892

CLELAND, W. A., Yloilo, Philippine Islands, {G. 25 Apr., 1893 / M. 25 Nov., 1902}

CLYNE, JAMES, Messrs Clyne, Mitchell, & Co., Commercial road, Aberdeen, 18 Dec., 1900

COATS, ALLAN, Jun., B.Sc., Hayfield, Paisley, 23 Oct., 1900

COATS, JAMES, 35 St. Andrew's drive, Pollokshields, Glasgow, 21 Dec., 1897

COCHRAN, JAMES T., 52 Woodville gardens, Langside, Glasgow, 26 Feb., 1884

COCHRANE, JOHN, Grahamston foundry, Barrhead, 25 Mar., 1890

COCKBURN, GEORGE, Cardonald, near Glasgow, 25 Oct., 1881

COCKBURN, ROBERT, Cumbrae House, Dumbreck, Glasgow, 25 Jan., 1898

COLLIE, CHARLES, 19-21 Eaglesham street, Plantation, Glasgow, 26 Apr., 1898

COLVILLE, ARCHIBALD, 51 Clifford street, Bellahouston, Govan, 23 Jan., 1900

COLVILLE, ARCHIBALD, Motherwell, 27 Oct., 1896

COLVILLE, DAVID, Jerviston house, Motherwell, 27 Oct., 1896

CONNELL, CHARLES, Whiteinch, Glasgow, {G. 19 Dec., 1876 / M. 25 Mar., 1884}

CONNER, ALEXANDER, 6 Grange Knowe, Irvine road, Kilmarnock, {G. 26 Feb., 1884 / M. 24 Jan., 1899}

CONNER, BENJAMIN, 196 St. Vincent street, Glasgow, {G. 22 Dec., 1885 / M. 26 Oct., 1897}

CONNER, JAMES, Lancashire, Derbyshire, and E. Coast Rly., Locomotive Supt.'s Office, Tuxford, Newark, {G. 18 Dec., 1877 / M. 24 Nov., 1885}

CONNER, JAMES, English Electric Manufacturing Co., Limited, Preston, 20 Nov., 1900

COOPER, JAMES, Aberdeen Steam Navigation Company, Aberdeen, 19 Dec., 1893

COPELAND, JAMES, St. Andrew's, Bearsden, 17 Feb., 1864

COPESTAKE, S. G. G., Glasgow Locomotive works, Little Govan, Glasgow, 11 Mar., 1868

†COPLAND, WILLIAM R., 146 W. Regent street, Glasgow, 20 Jan., 1864

CORMACK, Prof. JOHN DEWAR, B.Sc., University College, Gower street, London, W.C., 24 Nov., 1896

COSTIGANE, A. PATON, Lymekilns, East Kilbride, 20 Jan., 1903

COULSON, W. ARTHUR, 47 King street, Mile-end, Glasgow, 15 June, 1898

COUPER, SINCLAIR, Moore Park Boiler works, Govan, G. 21 Dec., 1880 M. 27 Oct., 1891

COURTIER-DUTTON, W. T., Shipbuilder and Engineer, 121 St. Vincent street, Glasgow, 22 Dec., 1896

COUTTS, FRANCIS, 25 Roslin Terrace, Aberdeen. G. 27 Oct., 1885 M. 24 Jan., 1899

COWAN, DAVID, Coulport house, Loch Long, Dumbartonshire, 24 Apr., 1900

COWAN, JOHN, 8 Wilton mansions, Kelvinside N., Glasgow, 27 Apr., 1897

COWAN, JOHN, Clydebridge Steel Co., Ltd., Cambuslang, 16 Dec., 1902

†COWIE, WILLIAM, 51 Endsleigh gardens, Ilford, Essex, 20 Feb., 1900

CRAIG, ALEXANDER, 163 West George street, Glasgow, G. 26 Nov., 1895 M. 16 Dec., 1902

CRAIG, ARCHIBALD FULTON, Belmont, Paisley, 25 Jan., 1898

CRAIG, JAMES, Lloyd's Registry, 14 Cross-shore street, Greenock, G. 20 Dec., 1892 M. 21 Dec., 1897

CRAIG, JOHN, Broom, Newton Mearns, 22 Jan., 1900

CRAN, JOHN, Albert Engine works, Leith, 21 Jan., 1902

CRAWFORD, JAMES, 30 Ardgowan street, Greenock, 27 Oct., 1896

CRAWFORD, SAMUEL, 51 Lidderdale road, Sefton Park, Liverpool, 18 Dec., 1883

CRICHTON, JAMES L., 3 East Park terrace, Maryhill, Glasgow, 18 Dec., 1894

CRIGHTON, J., Rotterdamsche Droogdok, Maatschappy, Rotterdam, Holland, G. 23 Nov., 1897 M. 20 Jan., 1903

CROCKATT, WILLIAM, 179 Nithsdale road, Pollokshields, Glasgow, 22 Mar., 1881

CROSHER, WILLIAM, 121 St. Vincent street, Glasgow, 24 Jan., 1899

CROW, JOHN, Engineer, 236 Nithsdale road, Pollokshields, Glasgow, 25 Jan., 1898

CUMMING, WM. J. L., Motherwell Bridge Co., Motherwell, 24 Jan., 1899

CUNNINGHAM, PETER N., Easterhouse, Kennyhill, Cumbernauld road, Glasgow, 23 Dec., 1884

CUTHILL, WILLIAM, Beechwood, Uddingston, 24 Nov., 1896

DARROCH, JOHN, 27 South Kinning place, Paisley road, Glasgow, 24 Jan., 1899

DAVIDSON, DAVID, 17 Regent Park square, Strathbungo, Glasgow, G. 22 Mar., 1881 M. 18 Dec., 1888

DAVIE, JAMES, 11 Glencairn drive, Pollokshields W., Glasgow, 19 Dec., 1899

DAVIES, CHARLES M., Leslie house, Pollokshields, Glasgow, 24 Apr., 1900

DAVIS, CHARLES H., 99 Cedar street, New York, U.S.A., 20 Nov., 1900

DAVIS, HARRY LLEWELYN, Messrs Cochran & Co., Ltd., Newbie, Annan, G. 18 Dec., 1888; M. 23 April, 1901

DAWSON, CHARLES E., 571 Sauchiehall street, Glasgow, 21 Jan., 1902

DELACOUR, FRANK PHILIP, Baku, Russia, 24 Apr., 1900

DELMAAR, FREDERICK ANTHONY, Sourabaya, Netherlands East Indies, G. 24 Apr., 1883; M. 24 Oct., 1899

DEMPSTER, JAMES, 7 Knowe terrace, Pollokshields, Glasgow, 24 Jan., 1899

DENHOLM, JAMES, 40 Derby street, Glasgow, 21 Nov., 1883

DENHOLM, WILLIAM, Meadowside Shipbuilding yard, Partick, Glasgow, G. 18 Dec., 1883; M. 21 Nov., 1893

DENNY, ARCHIBALD, Braehead, Dumbarton, 21 Feb., 1888

DENNY, JAMES, Engine works, Dumbarton, 25 Oct., 1887

DENNY, Col. JOHN M., M.P., Garmoyle, Dumbarton, 27 Oct., 1893

DENNY, LESLIE, Leven Shipyard, Dumbarton, 30 Apr., 1895

DENNY, PETER, Bellfield, Dumbarton, 21 Feb., 1888

†DEWRANCE, JOHN, 165 Great Dover street, London, S.E., 19 Feb., 1901

DICK, FRANK W., c/o The Parkgate Steel & Iron Co., Ltd., Parkgate, Rotherham, 19 Mar., 1878

DICK, JAMES, 12 Ronald street, Coatbridge, 18 Mar., 1902

DIMMOCK, JOHN WINGRAVE, Lloyd's Register of Shipping, 342 Argyle street, Glasgow, 22 Mar., 1893

DIXON, JAMES S., 127 St. Vincent street, Glasgow, G. 24 Dec., 1873; M. 22 Jan., 1878

DIXON, WALTER, 11 Wilton mansions, Glasgow, 26 Feb., 1895

DOBSON, WILLIAM, The Chesters, Jesmond, Newcastle-on-Tyne, 17 Jan., 1871

DODD, T. J., Lloyd's Register of Shipping, 342 Argyle street, Glasgow, 20 Nov., 1900

D'OLIVEIRA, RAPHAEL CHRYSOSTOME, Campos Rio de Janeiro, Brazil, 20 Feb., 1900

DONALD, B. B., Low Balernock, Petershill, Glasgow, G. 20 Mar., 1888; M. 24 Jan., 1899

DONALD, DAVID P., Johnstone, 21 Mar., 1899

DONALD, ROBERT HANNA, Abbey works, Paisley, 22 Nov., 1892

DONALDSON, A. FALCONER, Beechwood, Partick, G. 27 Oct., 1896; M. 16 Dec., 1902

DONALDSON, JAMES, Almond villa, Renfrew, 25 Jan., 1876

DOUGLAS, CHARLES STUART, B.Sc., "St. Brides," 12 Dalziel drive, Pollokshields, Glasgow, G. 24 Jan., 1899; M. 3 Mar., 1903

DOWNIE, A. MARSHALL, B.Sc., London road Iron works, Glasgow, 21 Nov., 1899

DOYLE, PATRICK, F.R.S.E., 7 Government place, Calcutta, India, 23 Nov., 1886

DREW, ALEXANDER, 14 Talbot House, St. Martin's lane, London, W.C., 29 Apr., 1890

DRUMMOND, WALTER, The Glasgow Railway Engineering works, Govan, Glasgow, 26 Mar., 1895

DRYSDALE, JOHN W. W., 37 Westercraigs, Dennistoun, Glasgow, 23 Dec., 1884

DUNCAN, GEORGE F., 12 Syriam terrace, Broomfield road, Springburn, Glasgow, G. 23 Nov., 1886 M. 20 Mar., 1894

DUNCAN, GEORGE THOMAS, Cumledge, Uddingston, 15 Apr., 1902

DUNCAN, HUGH, 11 Hampden terrace, Mount Florida, Glasgow, 15 June, 1898

DUNCAN, JOHN, Ardenclutha, Port-Glasgow, 23 Nov., 1886

DUNCAN, ROBERT, Whitefield Engine works, Govan, 25 Jan., 1881

DUNCAN, ROBERT, Maarowa crescent, Wellington, New Zealand, 24 Oct., 1899

DUNCAN, W. LEES, Partick foundry, Partick, 18 Dec., 1900

DUNKERTON, ERNEST CHARLES, 43 Cecil street, Hillhead, Glasgow, 17 Feb., 1903

DUNLOP, DAVID JOHN, Inch works, Port-Glasgow, 23 Nov., 1869

DUNLOP, JOHN G., Clydebank, Dumbartonshire, 23 Jan., 1877

DUNLOP, THOMAS, 156 Hyndland road, Glasgow, 19 Dec., 1899

DUNLOP, WILLIAM A., Harbour Office, Belfast, 23 April, 1901

DUNLOP, WILLIAM, c/o N. Odero fu Alesso, Sestri Ponente, Italy, G. 22 Jan., 1884 M. 24 Jan., 1899

DUNN, JAMES, Engineer, Collalis, Scotstounhill, Glasgow, 23 April, 1901

DUNN, J. R., 42 Magdalen Yard road, Dundee, 16 Dec., 1902

†DUNN, PETER L., 815 Battery street, San Francisco, U.S.A., 26 Oct., 1886

†DUNSMUIR, HUGH, Govan Engine Works, Govan, 21 Apr., 1903

DYER, HENRY, M.A., D.Sc., 8 Highburgh terrace, Dowanhill, Glasgow, 23 Oct., 1883

EDWARDS, CHARLES, The Greenock Foundry Company, Greenock, 26 Oct., 1897

ELGAR, FRANCIS, LL.D., F.R.SS., L.& E., 34 Leadenhall street, London, E.C., 24 Feb., 1885

ELLIOTT, ROBERT, B.Sc., Lloyd's Surveyor, Greenock, G. 24 Mar., 1885 M. 21 Feb., 1898

EWEN, PETER, The Barrowfield Ironworks, Ltd., Craigielea, Bothwell, 21 Mar., 1899

FAICKNEY, ROBERT, 3 Thornwood terrace, Partick, 20 Nov., 1900

FAIRWEATHER, WALLACE, 62 St. Vincent st., Glasgow, 24 Apr., 1894

FERGUSON, DAVID, Glenholm Port-Glasgow, 29 Oct., 1901

FERGUSON, JOHN JAMES, Kennard, Kirn, 24 Jan., 1899

FERGUSON, LOUIS, 8 Belhaven terrace, Kelvinside, Glasgow, G. 22 Jan., 1895 M. 26 Nov., 1901

FERGUSON, PETER, Caerlon, Paisley, G. 22 Jan., 1895 M. 26 Nov., 1901

FERGUSON, PETER, 8 Belhaven terrace, Kelvinside, Glasgow, 22 Oct., 1889

FERGUSON, WILFRED H., 4 Thornwood terrace, Partick, 22 Nov., 1898

FERGUSON, WILLIAM D., 3 Mount Delphi, Antrim road, Belfast, G. 27 Jan., 1885 M. 20 Mar., 1894

FERGUSON, WILLIAM R., Messrs Barclay, Curle & Co., Ltd., Whiteinch, Glasgow, G. 22 Feb., 1881 M. 22 Jan., 1895

FIFE, WILLIAM, Messrs William Fife & Sons, Fairlie, Ayrshire, 28 Apr., 1903

FINDLAY, ALEXANDER, Parkneuk Iron works, Motherwell, 27 Jan., 1880

FINLAYSON, FINLAY, Laird street, Coatbridge, 23 Dec., 1884

FISHER, ANDREW, St. Mirren's Engine works, Paisley, 25 Jan., 1898

FLEMING, ANDREW E., Kandy, Ceylon, 23 Jan., 1894

FLEMING, GEORGE E., Messrs Dewrance & Co., 163 St. Vincent street, Glasgow, 27 Oct., 1896

FLEMING, JOHN, Dellburn works, Motherwell, 24 Jan., 1899

FLETCHER, JAMES, 15 Kildonan terrace, Paisley road, Ibrox, Glasgow, G. 28 Jan., 1896 M. 23 Nov., 1897

FLETT, GEORGE L., 5 Abercromby terrace, Ibrox, Glasgow, 22 Jan., 1895

FORSYTH, LAWSON, 97 St. James road, Glasgow, 18 Dec., 1883

FOSTER, JAMES, 42 Herriet street, Pollokshields, Glasgow, 26 Jan., 1897

FOX, SAMSON, Grove House, Harrogate, 2 Nov., 1880

FRAME, JAMES, 6 Kilmailing terrace, Cathcart, Glasgow, 23 Feb., 1897

FRYER, TOM J., "Brookdean," Hope, Sheffield, G. 18 Dec., 1894 M. 20 Dec., 1898

FUJII, TERUGORO, c/o Admiralty, Tokio, Japan, 21 Feb., 1899

FULLERTON, ALEXANDER, Vulcan Works, Paisley, 22 Dec., 1896

FULLERTON, JAMES, Abbotsburn, Paisley, 19 Mar., 1901

FULLERTON, ROBERT A., 1 Strathmore gardens, Hillhead, Glasgow, 19 Mar., 1901

FULTON, NORMAN O., 8 Moray Cottages, Scotstoun, Glasgow, G. 23 Feb., 1892 M. 19 Mar., 1901

FYFE, CHARLES F. A., Craigielea, Pitkerro road, Dundee, G. 18 Dec., 1894 M. 28 Apr., 1903

GALE, EDMUND WILLIAM, Drawing Office, Consolidated Gold Fields of South Africa, Box 67, Johannesburg, South Africa, 23 Nov., 1897

GALE, WILLIAM M., 18 Huntly gardens, Kelvinside, Glasgow, 24 Jan., 1893

GALLETLY, ARCHIBALD A., 10 Greenlaw avenue, Paisley, 22 Jan., 1901

GALLOWAY, CHARLES S., Greenwood City, Vancouver, B.C., 22 Jan., 1895

GARDNER, WALTER, 11 Kildonan terrace, Paisley road W., Glasgow, 20 Dec., 1898

GEARING, ERNEST, Fenshurst, Clarence drive, Harrogate, 20 Mar., 1888

GEMMELL, E. W., Board of Trade Offices, 7 York street, Glasgow, 18 Dec., 1888

GEMMELL, THOMAS, Electric Lighting Department, St. Enoch Station, Glasgow, 24 Oct., 1899

GIBB, ANDREW, Garthland, Westcombe Park road, Blackheath, London, S.E., G. 23 Dec., 1873 M. 21 Mar., 1882

GIFFORD, PATERSON, c/o Messrs Bell, Brothers & M'Lelland, 135 Buchanan street, Glasgow, 23 Nov., 1886

GILCHRIST, ARCHIBALD, 36 Finnieston street, Glasgow, 16 Dec., 1902

GILCHRIST, JAMES, Messrs Barclay, Curle & Co., Finnieston quay, Glasgow, G. 26 Dec., 1866 M. 29 Oct., 1878

GILLESPIE, ANDREW, 65 Bath street, Glasgow, 20 Nov., 1894

GILLESPIE, JAMES, 21 Minerva street, Glasgow, G. 24 Feb., 1874 M. 24 Mar., 1891

GILLESPIE, JAMES, Jun., Margaretville, Orchard street, Motherwell, 18 Dec., 1900

GILMOUR, JOHN H., River Bank, Irvine, 20 Feb., 1900

GLASGOW, JAMES, Fernlea, Paisley, 25 Jan., 1898

†GOODWIN, GILBERT S., Alexandra buildings, James street, Liverpool, 28 Mar., 1866

GORDON, A. G., c/o Messrs Shewan, Tomes, & Co., Hong kong, China, 23 April, 1901

GORDON, JOHN, 152 Craigpark street, Glasgow, 26 Mar., 1895

GORRIE, JAMES M., 1 Broomhill terrace, Partick, Glasgow, 22 Nov., 1898

GOUDIE, WILLIAM J., B.Sc., 92 Albert drive, Crosshill, Glasgow, G. 21 Dec., 1897 M. 29 Oct., 1901

GOURLAY, H. GARRET, Dundee foundry, Dundee, 25 Apr., 1882

GOVAN, ALEXANDER, The Sheiling, Craigendoran, 24 Oct., 1899

GOW, GEORGE, Aroka, Bellevue Road, Mount Eden, Auckland, New Zealand, 20 Mar., 1900

GOWAN, A. B., Byram, Maxwell drive, Pollokshields, Glasgow, G. 24 Jan., 1882 M. 22 Jan., 1895

GRACIE, ALEXANDER, Fairfield Shipbuilding and Engineering Company, Govan, G. 26 Feb., 1884 M. 24 Nov., 1896

GRAHAM, JOHN, 60 Cambridge drive, Kelvinside, Glasgow, 25 Jan., 1898
GRAHAM, JOHN, 25 Broomhill terrace, Partick, 23 Oct., 1900
GRAHAM, JOHN, 15 Armadale street, Dennistoun, Glasgow, G. 19 Mar., 1901 M. 21 Apr., 1903
GRAHAM, WALTER, Kilblain Engine works, Nicholson street, Greenock, G. 28 Jan., 1896 M. 15 June, 1898
GRANT, THOMAS M., 17 Clarence drive, Hyndland, Glasgow, 25 Jan., 1876
GRAY, DAVID, 77 West Nile street, Glasgow, 21 Nov., 1899
GRAY, JAMES, Riverside, Old Cumnock, Ayrshire, 8 Jan., 1862
GRETCHIN, G. L., Works Manager, Chantiers Navals Ateliers and Founderies de Nicolaieff, Nicolaieff, Russia, 25 Jan., 1893
GRIEVE, JOHN, Engineer, Motherwell, 25 Jan., 1898
GRIGG, JAMES, 135 Balshagray avenue, Partick, 20 Jan., 1903
GROVES, L. JOHN, Engineer, Crinan Canal, Ardrishaig, 20 Dec., 1881
GUTHRIE, JOHN, The Crown Iron works, Glasgow, 27 Oct., 1896

HAIG, ROBERT, The Mechanical Retorts Co., Limited Murray street, Paisley, 22 Jan., 1901
HAIGH, WILLIAM R., 6 Elmwood gardens, Jordanhill, 22 Dec., 1896
HALKET, JAMES P., Glengall Iron works, Millwall, London, E., 26 Oct., 1897
HALL, WILLIAM, Shipbuilder, Aberdeen, 25 Jan., 1881
HALLEY, WILLIAM LIZARS, Lennoxlea, Dumbarton, 21 Dec., 1897
HAMILTON, ARCHIBALD, Clyde Navigation Chambers, Glasgow, G. 24 Feb., 1874 M. 24 Nov., 1885
HAMILTON, CLAUD, 247 St. Vincent street, Glasgow, 15 June, 1898
HAMILTON, DAVID C., Clyde Shipping Company, 21 Carlton place, Glasgow, G. 23 Dec., 1873 M. 22 Nov., 1881
HAMILTON, JAMES, Messrs William Beardmore & Co., Govan, G. 26 Dec., 1863 M. 18 Mar., 1876
HAMILTON, JAMES, 6 Kyle park, Uddingston, 20 Nov., 1900
*†HAMILTON, JOHN, 22 Athole gardens, Glasgow,
HAMILTON, JOHN K., 230 Berkeley street, Glasgow, 15 May, 1900
HAND, HENRY, Lloyd's Register, 342 Argyle street, Glasgow, 22 Jan., 1901
HARMAN, BRUCE, 35 Connaught road, Harlenden, London, N.W., G. 2 Nov., 1880 M. 22 Jan., 1884
HARRISON, J. E., 160 Hope street, Glasgow, G. 26 Feb., 1889 M. 22 Feb., 1898
HART, P. CAMPBELL, John Finnie street, Kilmarnock, 24 Nov., 1896

HARVEY, JAMES, 224 West street, Glasgow, 24 Jan., 1899

HARVEY, JOHN H., Messrs Wm. Hamilton & Co., Port-Glasgow, 22 Feb., 1887

HARVEY, THOMAS, Grangemouth Dockyard Co., Grangemouth, 19 Dec., 1899

HAY, JOHN, 7 Linden Mansions, Hornsea lane, Crouch End, London, N., 26 Nov., 1901

HAY, RANKIN, 44 Windsor terrace, St. George's road, Glasgow, 18 Dec., 1900

HAYWARD, THOMAS ANDREW, 18 Carrington street, Glasgow, 22 Mar., 1898

†HENDERSON, A. P., 30 Lancefield quay, Glasgow, 25 Nov., 1879

HENDERSON, FREDERICK N., Meadowside, Partick, Glasgow, 26 Mar., 1895

HENDERSON, J. BAILIE, Government Hydraulic Engineer, Brisbane, Queensland, 18 Dec., 1888

HENDERSON, JAMES BLACKLOCK, D.Sc., 146 Cambridge drive, Glasgow, 20 Nov., 1900

HENDERSON, JOHN FRANCIS, B.Sc., Albion Motor Car Co., Ltd., 169 Finnieston street, Glasgow 16 Dec., 1902

†HENDERSON, JOHN L., 25 Nov., 1879

HENDERSON, ROBERT, 777 London road, Glasgow, 19 Mar., 1901

HENDERSON, WILLIAM STEWART, Belwood, Coatbridge, 24 Nov., 1896

HENDRY, JAMES C., 8 Fleming terrace, George street, Shettleston, 18 Dec., 1900

HENRY, ERENTZ, 13 Ann street, Hillhead, Glasgow, 20 Feb., 1900

HERRIOT, W. SCOTT, 19 Keir street, Pollokshields, Glasgow, 28 Oct., 1890

HETHERINGTON, EDWARD P., Messrs John Hetherington & Co, Ltd., Pollard street, Manchester, 22 Nov., 1892

HIDE, WILLIAM SEYMOUR, Messrs Amos & Smith, Albert Dock works, Hull, 18 Dec., 1888

HOGARTH, W. A., 293 Onslow drive, Glasgow, 20 Nov., 1900

HOGG, CHARLES P., 53 Bothwell street, Glasgow, 2 Nov., 1880

HOGG, JOHN, Victoria Engine works, Airdrie, 20 Mar., 1883

HÖK, W., 10 Karlaplan, Stockholm, Sweden, 29 Oct., 1901

HOLLIS, H. E., 40 Union street, Glasgow, A. 20 Nov., 1897 / M. 24 Oct., 1899

HOLMES, F. G., Town Hall, Govan, 23 Mar., 1880

HOLMS, A. CAMPBELL, Lloyd's Register, 56 John street, Sunderland, 24 Apr., 1894

HOMAN, WILLIAM M'L., 13 Mutual Buildings, Durban, Natal, G. 26 Jan., 1892 / M. 26 Oct., 1897

HOME, HENRY, Cambridge House, High street, Biggleswad, Bedfordshire, 23 Feb., 1897

HORNE, GEORGE S., Retreat, Kilmalcolm, 21 Feb., 1899

HORNE, JOHN, Rokeby villa, Carlisle, 23 Nov., 1897

†HOUSTON, COLIN, Harbour Engine works, 60 Portman street, Glasgow, 25 Mar., 1890

HOUSTON, JAMES, Junr., Brisbane house, Bellahouston, 25 Jan., 1898

HOUSTON, WILLIAM CAMPBELL, B.Sc., 4 Abbotsford place, Glasgow, G. 26 Oct., 1897 M. 3 Mar., 1903

HOWARD, JOHN ROWLAND, Parkside place, Johnstone, 18 Dec., 1900

HOWAT, WILLIAM, 21 Kirkland street, Glasgow, 22 Feb., 1898

†HOWDEN, JAMES, 195 Scotland street, Glasgow, Original

HUBBARD, ROBERT SOWTER, 211 South Broad street, Elizabeth, N.J., U.S.A., 19 Dec., 1899

HUME, JAMES HOWDEN, 195 Scotland street, Glasgow, 22 Dec., 1891

HUMMEL, HORACE JAMES JORDAN, c/o Pintsch's Patent Lighting Co., 38 Leadenhall street, London, E.C., 23 April, 1901

*†HUNT, EDMUND, 121 West George street, Glasgow, Original

HUNTER, GILBERT M., Newyards, Maybole, Ayr, G. 26 Oct., 1886 M. 19 Nov., 1889

HUNTER, JAMES, Aberdeen Iron works, Aberdeen, 25 Jan., 1881

HUNTER, JAMES, 101 St. Vincent street, Glasgow, 20 Feb., 1900

HUNTER, JOHN, 13 Queen's Gate, Dowanhill, Glasgow, A. 22 Jan., 1895 M. 21 Mar., 1899

HUNTER, JOSEPH GILBERT, P.O. Box 671, Newport News, Va., U.S.A., 24 Feb., 1891

HUNTER, JOSEPH M., Byars terrace, North Orchard street, Motherwell, 26 Nov., 1901

HUNTER, MATTHEW, Burnbank, Whiteinch, 19 Mar., 1901

HUTCHEON, JAMES, 46 Park drive south, Whiteinch, 19 Mar., 1901

HUTCHESON, ARCHIBALD, 37 Mair street, Plantation, Glasgow, 22 Dec., 1896

HUTCHESON, JOHN, 37 Mair street, Plantation, Glasgow, 22 Mar., 1898

HUTCHISON, JAMES H., Shipbuilder, Port-Glasgow, 26 Mar., 1895

HUTCHISON, JOHN S., 126 Bothwell street, Glasgow, 24 Apr., 1900

HUTCHISON, M., 70 South Woodside road, Glasgow, 29 Oct., 1901

HUTSON, ALEXANDER, Westbourne house, Kelvinside, Glasgow, 19 Dec., 1899

HUTSON, GUYBON, Culdees, Minard road, Partickhill, Glasgow, 21 Mar., 1893

HUTSON, JAMES, 117 Balshagray avenue, Partick, 19 Dec., 1899

†INGLIS, JOHN, LL.D., Point House Shipyard, Glasgow, 1 May, 1861

INGLIS, JOHN FRANCIS, 46 Princes terrace, Dowanhill, Glasgow, G. 26 Oct., 1897 M. 20 Jan., 1903

IRELAND, WILLIAM, 7 Ardgowan terrace, Glasgow, 25 Feb., 1890

JACK, ALEXANDER, 164 Windmillhill, Motherwell, 21 Nov., 1893

JACK, JAMES R., Mavisbank, Dumbarton, 27 Apr., 1897

JACKSON, DANIEL, Thornbank, Dumbarton, 24 Oct., 1899

JACKSON, HAROLD D., Westdel, Dowanhill, Glasgow, G. 24 Mar., 1891; M. 20 Dec., 1898

JACKSON, WILLIAM, Govan Engine works, Govan, 21 Dec., 1875

JAMIESON, Professor ANDREW, F.R.S.E., 16 Rosslyn terrace, Kelvinside, Glasgow, 26 Mar., 1889

JEFF, WILLIAM, Northfleet Engineering works, Northfleet, Kent, 18 Dec., 1900

JEFFERY, ARTHUR W., 71 Dixon avenue, Glasgow, 23 April, 1901

JOHNSTON, DAVID, 9 Osborne terrace, Copland road, Glasgow, 25 Feb., 1879

JOHNSTON, ROBERT, Kirklee, Wallace street, Kilmarnock, 22 Mar., 1898

JOHNSTONE, GEORGE, F.R.S.E., Marine Superintendent, British India Steam Navigation Co., Ltd., 16 Strand road, Calcutta, 21 Mar., 1899

JONES, ARTHUR J. E., 118 Napiershall street, Glasgow, 29 Oct., 1901

JONES, LLEWELLYN, Chesterfield house, 98 Great Tower street, London, E.C., 25 Oct., 1892

JUDD, EDWIN H., Sentinel works, Glasgow, G. 20 Dec., 1898; M. 26 Nov., 1901

KAY, ALEXANDER J., 21 Endsleigh gardens, Partickhill, Glasgow, G. 24 Oct., 1893; M. 28 Apr., 1903

KEEGAN, THOMAS J. M., 18 Merchiston gardens, Edinburgh, 22 Jan., 1901

KEELING, THOMAS, 42 Prospecthill road, Langside, Glasgow, 19 Feb., 1901

KELLY, ALEXANDER, 100 Hyde Park street, Glasgow, 28 Feb., 1897

KEMP, DANIEL, 48 Randolph gardens, Partick, Glasgow, G. 23 Nov., 1886; M. 20 Dec., 1898

KEMP, EBENEZER, D., Birkenhead Iron works, Birkenhead, G. 20 Feb., 1883; M. 25 Oct., 1892

KEMPT, IRVINE, Jun., 37 Falkland mansions, Hyndland, Glasgow, G. 26 Feb., 1895; M. 27 Apr., 1897

KENNEDY, ALEXANDER M'A., Clydevale, Dumbarton, 30 Apr., 1895

KENNEDY, JOHN, Messrs R. M'Andrew & Co., Suffolk House, Laurence Pountney Hill, London, E.C., 23 Jan., 1877

KENNEDY, ROBERT, B.Sc., Messrs Glenfield & Kennedy, Kilmarnock, 23 Mar., 1897

KENNEDY, THOMAS, Messrs Glenfield & Kennedy, Kilmarnock, 22 Feb., 1876

KENNEDY, WILLIAM, 13 Victoria crescent, Dowanhill, Glasgow, 24 Apr., 1894

KER, WILLIAM ARTHUR, Manager, Patella Works, Paisley, 16 Dec., 1902

KERR, JAMES, Lloyd's Register of Shipping, Hull, 22 Feb., 1898

KEY, WILLIAM, 109 Hope street, Glasgow, 20 Feb., 1900

KINCAID, JOHN G., 30 Forsyth street, Greenock, 22 Feb., 1898

KING, A. C., Motherwell Bridge Co., Motherwell, 24 Jan., 1899

KING, DONALD, 1 Montgomerie cottages, Scotstoun, Glasgow, G. 21 Dec., 1886 M. 20 Mar., 1894

KING, J. FOSTER, The British Corporation, 121 St. Vincent street, Glasgow, 26 Mar., 1895

KINGHORN, A. J., 59 Robertson street, Glasgow, 24 Oct., 1899

KINGHORN, JOHN G., Tower Buildings, Water street, Liverpool, 23 Dec., 1879

KINMONT, DAVID W., Contractor's Office, Larkhall, G. 20 Feb., 1894 M. 19 Mar., 1901

†KIRBY, FRANK E., Detroit, U.S.A., 24 Nov., 1885

KLINKENBERG, JOHN, 4 Derby street, Glasgow, 16 Dec., 1902

KNIGHT, CHARLES A., c/o Messrs Babcock & Wilcox, Ltd., Oriel House, Farringdon st., London, E.C., 27 Jan., 1885

KNOX, ROBERT, 10 Clayton terrace, Dennistoun, Glasgow, 24 Nov., 1896

LACKIE, WILLIAM W., 75 Waterloo street, Glasgow, 22 Nov., 1898

LADE, JAMES A., Heathfield, Greenock, 27 Jan., 1891

LAIDLAW, D., 147 East Milton street Glasgow, 18 Mar., 1902

LAIDLAW, JOHN, 98 Dundas street, s.s., Glasgow, 25 Mar., 1884

LAIDLAW, ROBERT, 147 East Milton street, Glasgow, 26 Nov., 1862

LAIDLAW, THOMAS, 15 Lennox avenue, Scotstoun, Glasgow, 26 Nov., 1901

LAIDLAW, T. K., 147 East Milton street, Glasgow, 18 Mar., 1902

LAING, ANDREW, The Wallsend Slipway Company, Newcastle-on-Tyne, 20 Mar., 1880

LAIRD, ANDREW, 190 West George Street, Glasgow, 22 Nov., 1898

LAMBERT, JOHN, Corporation Electricity Works, Perth, 18 Dec., 1900

LAMBERTON, ANDREW, Sunnyside Engine works, Coatbridge, 27 Apr., 1897

LAMBIE, ALEXANDER, Ravenshall, Port-Glasgow, 19 Mar., 1901

LANG, C. R., Holm Foundry, Cathcart, Glasgow, G. 20 Nov., 1888 M. 26 Nov., 1895

LANG, JAMES, Messrs George Smith & Sons, 75 Bothwell street, Glasgow, 24 Feb., 1880

LANG, JOHN, Jun., Lynnhurst, Johnstone, 26 Feb., 1884

LANG, ROBERT, Quarrypark, Johnstone, 25 Jan., 1898

LAURENCE, GEORGE B., Clutha Iron works, Paisley road, Glasgow, 21 Feb., 1888

LAWS, BERNARD COURTNEY, 52 Fern avenue, Jesmond, Newcastle-on-Tyne, 26 Oct., 1897

LE ROSSIGNOL, A. E., Corporation Tramway Office, City road, Newcastle-on-Tyne, 22 Nov., 1898

†LEE, ROBERT, 105 Clarence drive, Partickhill, Glasgow, G. 21 Dec., 1886 M. 22 Mar., 1898

LEITCH, ARCHIBALD, 40 St. Enoch square, Glasgow, 22 Dec., 1896

LEMKES, C. R. L., 5 Wellington street, Glasgow, A. 26 Feb., 1884 M. 22 Mar., 1898

LENNOX, ALEXANDER, 34 Glasgow street, Hillhead, Glasgow, G. 23 Jan., 1894 M. 19 Mar., 1901

LESLIE, JAMES T. G., 148 Randolph terrace, Hill street, Garnethill, Glasgow, 25 Apr., 1893

LESLIE, WILLIAM, Freemantle Harbour Works Office, Freemantle, West Australia, 24 Feb., 1891

LESTER, WILLIAM R., 11 West Regent street, Glasgow, G. 21 Nov., 1883 M. 24 Jan., 1899

LEWIN, HARRY W., 154 West Regent street, Glasgow, 20 Dec., 1898

†LINDSAY, CHARLES C., 217 W. George street, Glasgow, G. 23 Dec., 1873 M. 24 Oct., 1876

LINDSAY, W. F., 203 Nithsdale road, Pollokshields, Glasgow, 19 Mar., 1901

LITHGOW, WILLIAM T., Port-Glasgow, 21 Feb., 1893

LIVESEY, ROBERT M., c/o Messrs Topham Jones & Railton, H.M. Dockyard Extension, Gibraltar, 26 Jan., 1897

†LOBNITZ, FRED., Clarence house, Renfrew, G. 24 Mar., 1885 M. 20 Nov., 1896

LOCKIE, JOHN, Wh.Sc., 2 Custom House Chambers, Leith, 26 Jan., 1897

LONGBOTTOM, JOHN GORDON, Technical College, 38 Bath street, Glasgow, 22 Nov., 1898

†LORIMER, WILLIAM, Glasgow Locomotive works, Gushetfaulds, Glasgow, 27 Oct., 1896

†LOUDON, GEORGE FINDLAY, 10 Claremont Terrace, Glasgow, 25 Jan., 1896

LUKE, W. J., Messrs John Brown & Co., Ltd., Clydebank, 24 Jan., 1898

LUSK, HUGH D., c/o Mrs Nelson, Larch villa, Annan, 21 Feb., 1880

LYALL, JOHN, 33 Randolph gardens, Partick, 27 Oct., 1888

MACALPINE, JOHN H., Viewfield, Kilmalcolm, 20 Dec., 1898

M'ARTHUR, JAMES D., Oriental avenue, Bangkok, Siam, 26 Apr., 1898

MCAULAY, W., 10 Dixon street, Glasgow, 22 Nov., 1898

†M'CALL, DAVID, 160 Hope street, Glasgow, 17 Feb., 1858

M'CALLUM, H. MALCOLM, c/o Mrs Craighead, 191 Kilmarnock road, Shawlands, Glasgow, 24 Oct., 1899

M'COLL, PETER, 197 Byars road, Partick, G. 18 Dec., 1883 M. 24 Jan., 1899

†MACCOLL, HECTOR, Bloomfield, Belfast, 24 Mar., 1874

†MACCOLL, HUGO, Wreath Quay Engineering works, Sunderland, G. 20 Dec., 1881 M. 22 Oct., 1889

M'CREATH, JAMES, 208 St. Vincent street, Glasgow, 23 Oct., 1883

MACDONALD, D. H., Brandon works, Motherwell, 24 Mar., 1896

MACDONALD, JOHN, 146 West Regent street, Glasgow, 21 Mar., 1899

MACDONALD, JOHN DRON, 3 Rosemount terrace, Ibrox, Glasgow, 19 Mar., 1901

MACDONALD, ROBERT COWAN, Merrylee, Trefoil avenue, Shawlands, Glasgow, G. 21 Nov., 1899 M. 28 Apr., 1903

MACDONALD, THOMAS, 9 York street, Glasgow, 25 Jan., 1898

M'DOUGALL, ROBERT MELVIN, 86 Dale street, Glasgow, 20 Nov., 1900

M'DOWALL, JOHN JAS., Vulcan Engine Works, Piraeus, Greece, 29 Oct., 1901

M'EWAN, JAMES, Cyclops Foundry Co., Whiteinch, Glasgow, 26 Feb., 1884

M'EWAN, JOSEPH, 35 Houldsworth street, Glasgow, 27 Jan., 1891

MACFARLANE, JAMES, Annieslea, Motherwell, 15 June, 1898

MACFARLANE, JAMES W., 12 Balmoral villas, Cathcart, Glasgow, 2 Nov., 1880

†MACFARLANE, WALTER, 22 Park Circus, Glasgow, 26 Oct., 1886

M'FARLANE, GEORGE, 34 West George street, Glasgow, G. 24 Feb., 1874 M. 24 Nov., 1885

MACFEE, JOHN, Castle Chambers, Renfield street, Glasgow, 22 Jan., 1901

M'GEE, DAVID, c/o Messrs John Brown & Co., Clydebank, 22 Dec., 1896

†M'GEE, WALTER, Stoney brae, Paisley, 25 Jan., 1898

M'GEOCH, DAVID BOYD, Lilybank, Port-Glasgow, 28 Jan., 1896

M'GIBBON, W. C., 2 Carlton Court, Bridge street, Glasgow, 18 Dec., 1900

MACGREGOR, J. GRANT, c/o L. & N. Railway Co., 10th Broadway, Louisville, Ky., U.S.A., G. 21 Dec., 1886 M. 28 Apr., 1891

M'GREGOR, JOHN B., 6 Oxford terrace, Renfrew, G. 18 Dec., 1883 M. 27 Apr., 1897

M'GREGOR, THOMAS, 10 Mosesfield terrace, Springburn, Glasgow, 26 Jan., 1886

M'ILVENNA, JOHN, 13 Caird drive, Partickhill, Glasgow, 19 Mar., 1901

MACILWAINE, GEORGE W., 34 White street, Partick, 18 Mar., 1902

M'INDOE, JOHN B., 2 Park terrace, Underwood, Paisley, 21 Mar., 1899

M'INTOSH, DONALD, Dunglass, Bowling, 20 Feb., 1894

M'INTOSH, JOHN F., Caledonian Railway, St. Rollox, Glasgow, 28 Jan., 1896

MACKINTOSH, JOHN, 7 Park quadrant, Glasgow, {G. 18 Dec., 1894 M. 28 Apr., 1903}

MACKAY, HENRY JAMES, 39 Westbank terrace, Gibson street, Glasgow, 18 Feb., 1902

MACKAY, ROBERT, 7 Leslie street, Pollokshields, Glasgow, 23 Jan., 1900

M'KEAND, ALLAN, 3 St. James street, Hillhead, Glasgow, {G. 19 Dec., 1884 M. 20 Mar., 1892}

MACKECHNIE, JOHN, 342 Argyle street, Glasgow, 20 Dec., 1898

M'KECHNIE, JAMES, Messrs Vickers, Sons, & Maxim, Barrow-in-Furness, 24 Apr., 1888

MACKENZIE, JAMES, 8 St. Alban's road, Bootle, {G. 25 Oct., 1881 M. 24 Jan., 1899}

MACKENZIE, THOMAS B., Ellenslee, Wilson street, Motherwell, {G. 23 Jan., 1885 M. 26 Nov., 1893}

M'KENZIE, JOHN, Messrs J. Gardiner & Co., 24 St. Vincent place, Glasgow, 25 Apr., 1893

M'KENZIE, JOHN, Speedwell Engineering works, Coatbridge, 25 Jan., 1898

MACKIE, WILLIAM, 3 Park terrace, Govan, {G. 21 Dec., 1897 M. 24 Mar., 1903}

MACKIE, WILLIAM A., Falkland bank, Partickhill, Glasgow, 22 Mar., 1881

M'KIE, J. A., Copland works, Govan, 25 Jan., 1898

†MACKINLAY, JAMES T. C., 110 Gt. Wellington street, Kinning park, Glasgow, 27 Oct., 1896

M'KINNEL, WILLIAM, 234 Nithsdale road, Pollokshields, Glasgow, {A. 21 Feb., 1893 M. 22 Feb., 1898}

MACKINNON, James D., 93 Hope street, Glasgow. 24 Nov., 1896

M'LACHLAN, EWEN, 163 Kenmure street, Pollokshields, Glasgow, 21 Feb., 1899

M'LACHLAN, JOHN, Saucel Bank House, Paisley, 26 Oct., 1897

MACLAREN, JOHN F., B.Sc., Eglinton foundry, Canal street, Glasgow, 23 Feb., 1892

MACLAREN, ROBERT, Eglinton foundry, Canal street, Glasgow, {G. 2 Nov., 1880 M. 22 Dec., 1885}

McLAREN, JOHN ALEXANDER, 10 Dixon street, Glasgow, 22 Nov., 1898

McLAREN, WILLIAM, 9 Westbank quadrant, Hillhead, Glasgow, 26 Nov., 1901

M'LAREN, RICHARD ANDREW, South Gallowhill house, Paisley, 21 Apr., 1903

McLAURIN, DUNCAN, Cartside Mills, Milliken park, Renfrewshire, 23 Oct., 1900

MACLAY, Prof. ALEXANDER, B.Sc., Camptower, Bearsden, 28 Apr., 1891

MACLAY, DAVID M., Dunourne, Douglas street, Motherwell, 18 Dec., 1900

MACLEAN, Prof. MAGNUS, D.Sc., 51 Kersland street, Hillhead, Glasgow, 21 Nov., 1899

MACLEAN, WILLIAM DICK, Nuevas Hilaturas del Ter, Torello, Cataluña, Spain, 25 Jan., 1898

McLEAN, JOHN, Meadowside Shipbuilding Yard, Partick, 16 Dec., 1902

†MACLELLAN, WILLIAM T., Clutha Iron works, Glasgow, 21 Dec., 1886

McLELLAN, DUGALD, Caledonian Railway Co., Goods Yard, Buchanan street Station, Glasgow, 22 Jan., 1901

M'LELLAN, ARCHIBALD, Carron Co., Carron, Stirlingshire, 25 Apr., 1899

MACMILLAN, HUGH MILLAR, B.Sc., Messrs Wigham, Richardson, & Co., Newcastle-on-Tyne, 18 Dec., 1900

*†MACMILLAN, WILLIAM, Holmwood, Whittinghame drive, Kelvinside, Glasgow,

M'MILLAN, JOHN, Resident Electrical Engineer's Office, Falkirk, G. 27 Jan., 1885 M. 24 Jan., 1899

M'MILLAN, W. MACLEOD, Dockyard, Dumbarton, 22 Jan., 1901

MACMURRAY, WILLIAM, Taller Bisayas, Yloilo, Philippine Islands, 18 Mar., 1902

McMURRAY, THOMAS H., 22 Cliftonville avenue, Belfast, 22 Jan., 1901

M'NAIR, JAMES, Norwood, Prestwick road, Ayr, 26 Nov., 1895

MACNAMARA, JOSEPH, 190 Great Clowes street, Higher Broughton, Manchester, 20 Jan., 1903

M'NEIL, JOHN, Helen street, Govan, 23 Dec., 1884

MACNICOLL, NICOL, 6 Dixon street, Glasgow, 19 Mar., 1901

MACOUAT, R. B., Victoria Bolt and Rivet works, Cranstonhill, Glasgow, 21 Mar., 1899

MACTAGGART, JOHN, 30 Rue Pericleos, Piree, Greece, 15 Apr., 1902

M'WHIRTER, WILLIAM, 214 Holm street, Glasgow, 24 Mar., 1891

MACK, JAMES, 22 Rutland street, Edinburgh, G. 21 Dec., 1886 M. 20 Dec., 1898

MAITLAND, CREE, 190 West George street, Glasgow, 21 Apr., 1903

MANSON, JAMES, G. & S. W. Railway, Kilmarnock, 21 Feb., 1899

MARRIOTT, REUBEN, Plantation Boiler Works, Govan, 23 Feb., 1897

MARSHALL, DAVID, Glasgow Tube works, Glasgow, 22 Jan., 1895

MARSHALL, JOHN, Ashgrove, Kilwinning, 18 Dec., 1900

MARTIN, E. L., 122 Leadenhall street, London, E.C., 27 Oct., 1896

MATHEWSON, GEORGE, Bothwell works, Dunfermline, 21 Dec., 1875

MATHIESON, DONALD A., Caledonian Railway Co., Buchanan street Station, Glasgow, 26 Jan., 1897

MATHIESON, JAMES H., Saracen Tool Works, Glasgow, 29 Oct., 1901

MATTHEY, C. A., c/o W. Hope Campbell, Esq., 42 Krestchatik, Kieff, S. Russia, 26 Oct., 1897

MAVOR, HENRY A., 47 King street, Bridgeton, Glasgow, 22 Apr., 1884

MAVOR, SAM, 37 Burnbank gardens, Glasgow, 20 Nov., 1894

MAXTON, JAMES, 4 Ulster street, Belfast, 22 Jan., 1901

MAY, WILLIAM W., Woodbourne, Minard avenue, Partickhill, Glasgow, 25 Jan., 1876

MAYER, WILLIAM, Morwell House, Dumbarton, 23 Feb., 1897

MECHAN, HENRY, Messrs Mechan & Sons, Scotstoun Iron works, Glasgow, 25 Jan., 1887

MECHAN, SAMUEL, 7 Kelvingrove terrace, Glasgow, 27 Oct., 1891

MELDRUM, JAMES, 10 Victoria street, Westminster, London, S.W., G. 24 Oct., 1876 M. 28 Nov., 1882

MELVILLE, WILLIAM, Glasgow and South Western Railway, St. Enoch square, Glasgow, 23 Jan., 1883

MIDDLETON, R. A., 20 The Grove, Benton, near Newcastle-on-Tyne, G. 24 Jan., 1882 M. 28 Oct., 1890

MILLAR, SIDNEY, Harthill house, Cambuslang, G. 26 Feb., 1889 M. 21 Dec., 1897

MILLAR, WILLIAM, Towersland, Octavia terrace, Greenock, 19 Dec., 1899

MILLER, ARTHUR C., 12 Caird drive, Partickhill, Glasgow, 19 Mar., 1901

MILLER, JOHN F., Greenoakhill, Broomhouse, G. 23 Dec., 1873 M. 22 Nov., 1881

MILNE, CHARLES W., Fairmount, Scotstounhill, Glasgow, 26 Nov., 1901

MILNE, GEORGE, 10 Bothwell street, Glasgow, 22 Jan., 1901

†MIRRLEES, JAMES B., 45 Scotland street, Glasgow, Original

MITCHELL, ALEXANDER, Hayfield house, Springburn, Glasgow, 26 Jan., 1886

MITCHELL, GEORGE A., F.R.S.E., 5 West Regent street, Glasgow, 25 Jan., 1898

MITCHELL, THOMAS, Mitchell Bros., Gower street, Bellahouston, Glasgow, 20 Nov., 1888

MOIR, ERNEST W., c/o Messrs S. Pearson & Son. 10 Victoria street, Westminster, London, G. 25 Jan., 1881 M. 24 Jan., 1899

MOIR, JAMES, 70 Wellington street, Glasgow, 16 Dec., 1902

MOIR, JOHN, Clyde Shipbuilding and Engineering Company, Port-Glasgow, 23 Feb., 1897

MOIR, THOMAS, 10 Syriam terrace, Springburn, Glasgow, 23 Apr., 1901

MÖLLER, W., 22 Jan., 1901

MOLLISON, HECTOR A., B.Sc., 30 Balshagray avenue, Partick, G. 22 Nov., 1892 M. 20 Nov., 1900

MOLLISON, JAMES, 30 Balshagray avenue, Partick, 21 Mar., 1876

MOORE, RALPH D., B.Sc., 13 Clairmont gardens, Glasgow, 27 Apr., 1897

MOORE, ROBERT H., Caledonian Steel Castings Co., Govan, 16 Dec., 1902

MOORE, ROBERT T., B.Sc., 13 Clairmont gardens, Glasgow, 27 Jan., 1891

MORGAN, ROBERT, Arnsbrae, Dumbreck, Glasgow, 24 Mar., 1903

MORISON, WILLIAM, 50 St. Vincent street, Glasgow, 20 Mar., 1888

MORISON, WILLIAM B., 7 Rowallan gardens, Broomhill, Glasgow, 20 Nov., 1900

MORRICE, RICHARD WOOD, 24 Battlefield road, Langside, Glasgow, 23 Feb., 1897

MORRISON, ARTHUR MACKIE, Merchiston, Scotstounhill, Glasgow, W., G. 17 Dec., 1889 M. 8 Mar., 1903

MORRISON, WILLIAM, 11 Sherbrooke avenue, Pollokshields, Glasgow, 19 Feb., 1901

MORT, ARTHUR, Ellenslea, Wilson street, Motherwell, G. 26 Jan., 1897 M. 19 Dec., 1899

MORTON, DAVID HOME, 130 Bath street, Glasgow, 20 Nov., 1900

MORTON, DUNCAN A., Errol works, Errol, 21 Nov., 1899

MORTON, ROBERT, 8 Prince's square, Buchanan street, Glasgow, G. 17 Dec., 1878 M. 23 Jan., 1883

MORTON, ROBERT C., 16 Vinicombe street, Hillhead, Glasgow, 26 Nov., 1901

MOTION, ROBERT, Ancrum, Lenzie, 23 Feb., 1892

MOTT, EDMUND, 88 Connaught Road, Roath, Cardiff, 24 Mar., 1885

MOWAT, MAGNUS, Jun., Civil Engineer, Millwall Docks, London, G. 26 Oct., 1897 M. 26 Nov., 1901

†MUIR, HUGH, 7 Kelvingrove terrace, Glasgow, 17 Feb., 1864

MUIR, JAMES E., 45 West Nile street, Glasgow, 22 Dec., 1896

†MUIR, JOHN G., 24 Jan., 1882

MUIR, PETER GILLESPIE, 2 Osborne place, Govan, 18 Mar., 1902

MUIR, ROBERT WHITE, 97 St. James road, Glasgow, 21 Dec., 1897

MUIRHEAD, JAMES A., Natal Government Agency, 39 Victoria street, Westminster, London, S.W., 19 Feb., 1901

MUIRHEAD, WILLIAM, 37 West George street, Glasgow, 26 Oct., 1897

MUMME, CARL, 30 Newark street, Greenock, 22 Oct., 1895

MUMME, ERNEST CHARLES, Hajipur-Begam Sarai Railway Extension, Begam Sarai P.O., Tirhoot State Railway, India, G. 22 Nov., 1892 M. 20 Feb., 1900

MUNN, ROBERT A., Twynham, 5 Winn road Southampton, 22 Dec., 1896

MUNRO, JAMES, 34 Garthland drive, Glasgow, 16 Dec., 1902

MUNRO, JOHN, 3 Edmiston terrace, Copland road, Govan, 23 Apr., 1901

MUNRO, ROBERT D., Scottish Boiler Insurance Company, 111 Union street, Glasgow, 19 Dec., 1882

MURDOCH, FREDERICK TEED, Nile House, Mansourah, Egypt, 25 Feb., 1896

MURDOCH, J. A., 7 Park Circus place, Glasgow, G. 25 Oct., 1892 M. 20 Nov., 1900

MURPHY, B. STEWART, Lloyd's Register, 324-6, Third Floor, Bourse Buildings, Philadelphia, U.S.A., G. 24 Oct., 1893 M. 20 Nov., 1900

MURRAY, ANGUS, Strathroy, Dumbreck, {G. 14 May, 1878 M. 19 Nov., 1889}
MURRAY, HENRY, Shipbuilder, Port-Glasgow, 22 Dec., 1896
MURRAY, JAMES, Rossbank, Port-Glasgow, 22 Dec., 1896
MURRAY, JAMES, Messrs Murray MacVinnie & Co., Mavisbank quay, S.S., Glasgow, 26 Jan., 1886
MURRAY, RICHARD, 109 Hope street, Glasgow, 26 Oct., 1897
MURRAY, THOMAS BLACKWOOD, B.Sc., 3 Clarence drive, Kelvinside, Glasgow, 22 Dec., 1891
MURRAY, THOMAS R., Messrs. Spencer & Co., Melksham, Wilts, 25 Feb., 1896
MYLES, DAVID, Northumberland Engine works, Wallsend-on-Tyne, {G. 20 Dec., 1887 M. 19 Dec., 1899}
MYLNE, ALFRED, 108a Hope street, Glasgow, {G. 26 Jan., 1897 M. 24 Mar., 1903}

NAGAO, HANPEI, c/o Taipeifu, Formosa, Japan, 24 Dec., 1901
NAPIER, HENRY M., Shipbuilder, Yoker, near Glasgow, 25 Jan., 1881
†NAPIER, ROBERT T., 75 Bothwell street, Glasgow, 20 Dec., 1881
NEEDHAM, JAMES H., Colquhoun street, Dumbarton, 18 Mar., 1902
NEILSON, JAMES, C.B., Ironmaster, Mossend, 23 Mar., 1897
NEILSON, JAMES, Alma Boiler Works, Glasgow, 24 Mar., 1903
NELSON, ANDREW S., Snowdon, Sherbrooke avenue, Pollokshields, Glasgow, 27 Oct., 1896
NESS, GEORGE, 111 Union street, Glasgow, 23 Feb., 1897
NICOL, R. GORDON, 15 Regent Quay, Aberdeen, 20 Nov., 1900
†NORMAN, JOHN, 131a St. Vincent street, Glasgow, 11 Dec., 1861
NORRIS, CHARLES G., 504 Stockport road, Manchester, 29 Oct., 1901

O'NEILL, J. J., 5 Westminster gardens, Hillhead, Glasgow, 24 Nov., 1896
OLDFIELD, GEORGE, c/o Messrs Crarer Bros., Vauxhall works, Osborne street, Manchester, 22 Nov., 1898
OLIPHANT, WILLIAM, Belvidere, 10 Kay park terrace, Kilmarnock, 23 Feb., 1897
†ORMISTON, JOHN W., Douglas gardens, Uddingston, 28 Nov., 1860
ORR, ALEXANDER T., Marine Department, London and North-Western Railway, Holyhead, 24 Mar., 1883
ORR, JOHN R., Motherwell Bridge Co., Motherwell, 24 Jan., 1899

PAASCH, HEINRICH, 27 Rue d'Amsterdam, Antwerp,	28 Oct., 1890
PARKER, EDWARD HENRY, 11 Strathmore gardens, Hillhead, Glasgow,	16 Dec., 1902
PARSONS, The Hon. CHARLES ALGERNON, M.A., Holeyn Hall, Wylam-on-Tyne,	28 Apr., 1903
PATERSON, JOHN, Edradour, Dalmuir,	22 Jan., 1901
PATERSON, W. L. C., 5 Elmwood terrace, Jordanhill, Glasgow,	21 Nov., 1883
PATON, Professor GEORGE, Royal Agricultural College, Cirencester,	22 Nov., 1887
PATRICK, ANDREW CRAWFORD, Johnstone,	25 Jan., 1898
PATTERSON, JAMES, Maryhill Iron works, Glasgow,	22 Nov., 1898
PATTERSON, JAMES, 130 Elliot street, Glasgow,	18 Dec., 1900
PATTIE, ALEXANDER W., Hong Kong & Whampoa Dock Co., Hong Kong,	22 Jan., 1895
PAUL, H. S., Levenford works, Dumbarton,	24 Jan., 1899
PAUL, JAMES, Kirkton, Dumbarton,	24 Mar., 1903
PAUL, MATTHEW, Levenford works, Dumbarton,	G. 26 Feb., 1884 M. 21 Dec., 1886
PEACOCK, JAMES, Oriental Steam Navigation Co., 13 Fenchurch avenue, London, E.C.	G. 22 Nov., 1881 M. 21 Feb., 1899
PECK, EDWARD C., Messrs Yarrow & Company, Poplar, London,	G. 23 Dec., 1873 M. 23 Oct., 1888
PECK, JAMES J., 52 Randolph gardens, Broomhill, Glasgow,	22 Dec., 1896
PECK, NOEL E., 4 Ashgrove terrace, Partickhill road, Glasgow,	18 Dec., 1900
PENMAN, ROBERT REID, 16 Annfield place, Glasgow,	25 Jan., 1898
PENMAN, WILLIAM, Springfield house, Dalmarnock, Glasgow,	25 Jan., 1898
PETROFF, ALEXANDER, 60 Thornton avenue, Streatham Hill, London, S.W.,	19 Mar., 1901
PHILIP, WILLIAM LITTLEJOHN, Sherbrooke, Box, Wilts,	24 Jan., 1899
PICKERING, JONATHAN, 50 Wellington street, Glasgow,	3 Mar., 1903
PLUMMER, W. F., Soho works, Bradford,	19 Mar., 1901
POCOCK, J. HERBERT, 39 Falkland mansions, Kelvinside, Glasgow,	29 Oct., 1901
POLLOCK, DAVID, 128 Hope street, Glasgow,	23 Feb., 1897
POLLOK, ROBERT, Messrs John Brown & Co., Clydebank,	22 Dec., 1896
POOLE, WILLIAM JOHN, 65 Renfield street, Glasgow,	20 Dec., 1898
POPE, ROBERT BAND, Leven Shipyard, Dumbarton,	25 Oct., 1887
PRATTEN, WILLIAM J., Mornington, Derryvolgie avenue, Belfast,	22 Dec., 1896
PRINGLE, WILLIAM S., 15 Elm place, Aberdeen,	G. 24 Oct., 1893 M. 16 Dec., 1902

PURDON, ARCHIBALD, Inch works, Port-Glasgow, 27 Apr., 1897
PURVES, J. A., D.Sc., F.R.S.E., 53 York place, Edinburgh, 25 Oct., 1898
PURVIS, Prof. F. P., College of Naval Architecture, Imperial University, Tokio, Japan, 20 Nov., 1877
PUTNAM, THOMAS, Darlington Forge Co., Darlington, 15 June, 1898
PYLE, JAMES H., 88 Elliot street, Glasgow, 23 Feb., 1897

RAEBURN, CHARLES E., 1 Hillhead street, W., Glasgow, 24 Oct., 1899
RAINEY, FRANCIS E., c/o Mr F. Nell, 97 Queen Victoria street, London, S.E., 27 Apr., 1897
RAIT, HENRY M., 155 Fenchurch street, London, 23 Dec., 1868
RAMAGE, RICHARD, Shipbuilder, Leith, 22 Apr., 1873
RAMSAY, CHARLES, Electric Power Station, Weston-super-Mare, 21 Dec., 1897
RANKIN, JOHN F., Eagle foundry, Greenock, 23 Mar., 1886
RANKIN, MATTHEW, c/o Messrs Rankin & Demas, Engineers, Smyrna, G. 2 Nov., 1880; M. 20 Mar., 1894
RANKIN, ROBERT, Jun., 6 Brighton place, Govan, 22 Jan., 1901
RANKINE, DAVID, 238 West George street, Glasgow, 22 Oct., 1872
REED-COOPER, T. L., 70 West Cumberland street, Glasgow, 22 Dec., 1896
REID, ANDREW T., Hydepark Locomotive works, Glasgow, G. 21 Dec., 1886; M. 18 Dec., 1894
REID, GEORGE W., Locomotive Department, Natal Government Railways, Durban, Natal, S. Africa, 21 Nov., 1883
REID, J. MILLER, 110 Lancefield street, Glasgow, 23 Mar., 1897
†REID, JAMES, Shipbuilder, Port-Glasgow, 17 Mar., 1869
REID, JAMES, 3 Cart street, Paisley, 25 Jan., 1898
†REID, JAMES B., Chapelhill, Paisley, 24 Nov., 1891
REID, JAMES G., Moorpark Bolt and Nut works, Renfrew, G. 23 Dec., 1894; M. 21 Feb., 1899
†REID, JOHN, 7 Park terrace, Kelvinside, Glasgow, G. 21 Dec., 1886; M. 18 Dec., 1894
REID, JOHN, Baltic Chambers, 50 Wellington street, Glasgow, 18 Dec., 1900
REID, JOHN WILSON, Napier house, Bridge of Allan, N.B., 21 Jan., 1902
REID, ROBERT SHAW, 140 West George street, Glasgow, 21 Mar., 1899
REID, THOMAS, Jun., 6 Bridge street, Abbey, Paisley, 18 Dec., 1900
REID, W. J. H., Redlea, Linwood, Nr. Paisley, 16 Dec., 1902
RENNIE, ARCHIBALD, 7 Ratho street, Greenock, S. 31 Oct., 1902; M. 28 Apr., 1903
REW, JAMES H., Ardfern, Victoria place, Airdrie, 27 Oct., 1896

REYNOLDS, CHARLES H., Frederiksgade 27, Copenhagen, G. 23 Dec., 1873; M. 22 Nov., 1881

RICHARDS, T. J., 7 York street, Glasgow, 19 Mar., 1901

RICHMOND, Sir DAVID, North British Tube works, Govan, 21 Dec., 1897

RICHMOND, JAMES, Roselyn, 95 Maxwell drive, Pollokshields, Glasgow, G. 23 Jan., 1894; M. 23 Oct., 1900

RICHMOND, JOHN R., Holm foundry, Cathcart, Glasgow, 28 Jan., 1896

RIDDELL, W. G., c/o Messrs John Hastie & Co., Kilblain Engine Works, Greenock, 21 Feb., 1899

RIEKIE, JOHN, Argarth, Dumbreck, Glasgow, 29 Oct., 1901

RISK, ROBERT, Halidon Villa, Cambuslang, 23 Mar., 1897

RITCHIE, DUNCAN, Harley, Mount Vernon, 16 Dec., 1902

RITCHIE, GEORGE, Parkhead Forge, Glasgow, 15 June, 1898

ROBERTS, W. G. 29 Oct., 1901

ROBERTSON, A. W., The Shipyard, Ardrossan, 18 Dec., 1900

ROBERTSON, ALEXANDER, Jun., c/o Messrs Matthew Reid & Co., Kilmarnock, 22 Dec., 1896

ROBERTSON, ANDREW R., 8 Park Circus place, Glasgow, G. 12 Nov., 1892; M. 23 Feb., 1897

ROBERTSON, Prof. DAVID, B.Sc., 16 Rokeby avenue, Redland, Bristol, G. 19 Dec., 1899; M. 28 Apr., 1903

ROBERTSON, DAVID W., Dalziel Bridge works, Motherwell, 26 Nov., 1901

ROBERTSON, DUNCAN, Baldroma, Ibrox, Glasgow, 24 Oct., 1876

ROBERTSON, ROBERT, B.Sc., 154 West George street, Glasgow, 20 Nov., 1900

ROBERTSON, WILLIAM, 121 St. Vincent street, Glasgow, 25 Nov., 1863

ROBIN, MATTHEW, 58 Dumbreck road, Dumbreck, Glasgow, G. 20 Dec., 1887; M. 25 Jan., 1898

ROBINSON, J. F., Atlas works, Springburn, Glasgow, 24 Apr., 1888

ROBINSON, ROBERT, 54 Balshagray avenue, Partick, 3 Mar., 1903

ROBSON, GEORGE J., 22 Bath street, Glasgow, 21 Mar., 1899

*†ROBSON, HAZELTON R., 14 Royal crescent, Glasgow, Original

RODGER, ANDERSON, Glenpark, Port-Glasgow, 21 Mar., 1893

ROGER, GEORGE WILLIAM, 342 Argyle street, Glasgow, G. 24 Nov., 1896; M. 18 Dec., 1900

ROSENTHAL, JAMES H., Oriel House, 30 Farringdon street, London, 24 Nov., 1896

ROSS, J. MACEWAN, Ardenlea, Lenzie, G. 28 Nov., 1882; M. 27 Oct., 1891

ROSS, JAMES R., 7 Ashfield gardens, Jordanhill, Glasgow, 24 Nov., 1896

ROSS, RICHARD G., 21 Greenhead street, Glasgow, 11 Dec., 1861

ROSS, WILLIAM, 101 St. Vincent street, Glasgow, 18 Dec., 1900

ROWAN, FREDERICK JOHN, 71a West Nile street, Glasgow, 26 Jan., 1892

ROWAN, JAMES, 231 Elliot street, Glasgow, G. 21 Dec., 1875; M. 27 Jan., 1885

ROWLEY, THOMAS, Board of Trade Offices, Virginia street, Greenock, 18 Dec., 1888

ROY, WILLIAM, 16 De Vere Gardens, Ilford, Essex, G. 25 Jan., 1898; M. 21 Apr., 1903

RUDD, JOHN A., 177 West George street, Glasgow, G. 24 Jan., 1888; M. 15 June, 1898

RUSSELL, FREDERICK ALEXANDER, 20 Skirving street, Shawlands, Glasgow, 25 Jan., 1888

†RUSSELL, GEORGE, Belmont, Uddingston, G. 22 Dec., 1858; M. 4 Mar., 1863

†RUSSELL, JAMES, Waverley, Uddingston, G. 24 Nov., 1891; M. 25 Jan., 1898

RUSSELL, JOSEPH, Shipbuilder, Port-Glasgow, 22 Feb., 1881

RUSSELL, JOSEPH WILLIAM, 50 Charles street, St. Rollox, Glasgow, G. 6 Apr., 1887; M. 25 Jan., 1898

RUSSELL, THOMAS W., Admiralty, 21 Northumberland avenue, London, W.C., 27 Apr., 1897

RUTHERFORD, A. K., Engineer's Office, Natal Government Railways, Pietermaritzburg, Natal, 24 Dec., 1901

RUTHERFORD, GEORGE, Mercantile Pontoon Company, Cardiff, 23 Mar., 1897

SADLER, Prof. HERBERT C., D.Sc., University of Michigan, Ann Arbor, Michigan, U.S.A., G. 19 Dec., 1893; M. 23 Oct., 1900

SALMON, EDWARD MOWBRAY, Lloyd's Register, 71 Fenchurch street, London, E.C., 21 Jan., 1890

SALMOND, HENRY, 93 Hope street, Glasgow, 18 Dec., 1900

SAMPSON, ALEXANDER W., Bonnington, 9 Beech avenue, Bellahouston, 22 Dec., 1896

SAMSON, PETER, Board of Trade Offices, 54 Victoria street, Westminster, London, S.W., 24 Oct., 1876

SAMUEL, JAMES, Jun., 185 Kent road, Glasgow, 24 Feb., 1885

SANDERSON, JOHN, Lloyd's Register, Royal Exchange, Middlesbro'-on-Tees, 20 Feb., 1883

SAYERS, JAMES EDMUND, 189 St. Vincent street, Glasgow, 24 Dec., 1901

SAYERS, WILLIAM BROOKS, 189 St. Vincent street, Glasgow, 25 Oct., 1892

†SCOBIE, JOHN, c/o Alfred Scobie, Esq., 58 West Regent street, Glasgow, G. 25 Mar., 1878; M. 23 Oct., 1889

SCOTT, CHARLES CUNNINGHAM, Greenock Foundry, Greenock, 27 Oct., 1896

SCOTT, CHARLES WOOD, Dunarbuck, Bowling, 15 June, 1898

SCOTT, JAMES, Rock Knowe, Tayport, N.B., 22 Dec., 1896

SCOTT, JAMES, Jun., Strathclyde, Bowling, 15 June, 1898

SCOTT, JAMES G., 34 Montague street, Glasgow, 19 Mar., 1901
SCOTT, JOHN, 11 Grosvenor street, Edinburgh, 25 Jan., 1881
SELBY-BIGGE, D., 27 Mosley street, Newcastle-on-Tyne, 21 Feb., 1899
SHANKS, JAMES KIRKWOOD, Engineer, Beechfield, Denny, 23 Apr., 1901
SHANKS, WILLIAM, Tubal works, Barrhead, 15 June, 1898
SHARER, EDMUND, Scotstoun house, Scotstoun, Glasgow, 30 Apr., 1895
SHARP, JOHN, 28 Burnbank gardens, Glasgow, G. 24 Oct., 1882 / M. 22 Nov., 1898
SHARPE, ROBERT, Corporation Gas-Works, Belfast, 22 Jan., 1901
SHEARER, Sir JOHN, 13 Crown terrace, Dowanhill, Glasgow, 23 Oct., 1900
SHEDDEN, WILLIAM, 3 Andrew's street, Paisley, 24 Oct., 1899
SHEPHERD, JOHN W., Carrickarden, Bearsden, 26 Mar., 1889
SHERIFF, THOMAS, 17 Westlands drive, Whiteinch, Glasgow, 22 Dec., 1896
SHUTE, ARTHUR E., 12 Clydeview, Partick, Glasgow, 27 Oct., 1896
SHUTE, CHARLES W., 38 Rowallan gardens, Partick, Glasgow, 27 Oct., 1896
SHUTE, T. S., 8 Belvidere road, Sunderland, G. 19 Dec., 1893 / M. 22 Feb., 1898
SIME, JOHN, 96 Buchanan street, Glasgow, 26 Jan., 1897
†SIMPSON, ALEXANDER, 175 Hope street, Glasgow, 22 Jan., 1862
SIMPSON, ROBERT, B.Sc., 175 Hope street, Glasgow, 25 Jan., 1887
SIMPSON, WILLIAM, 15 Regent Quay, Aberdeen, 20 Nov., 1900
SINCLAIR, D. S., London road Iron works, Glasgow, 24 Dec., 1901
SINCLAIR, NISBET, 2 Gardenside avenue, Carmyle, G. 20 Mar., 1877 / M. 20 Dec., 1887
SLIGHT, GEORGE H., Jun., c/o James Slight, Esq., 131 West Regent street, Glasgow, G. 28 Nov., 1882 / M. 22 Oct., 1889
SMAIL, DAVID, c/o Messrs George Webster & Son, 19 Waterloo street, Glasgow, 22 Jan., 1901
SMALL, WILLIAM O., Carmyle avenue, Carmyle, 23 Feb., 1897
SMART, LEWIS A., Birkbeck Bank Chambers, Holborn, London, 22 Mar., 1898
SMILLIE, SAMUEL, 71 Lancefield street, Glasgow, A. 24 Jan., 1888 / M. 22 Feb., 1898
SMITH, ALEXANDER, 16 Courthill, Bearsden, G. 24 Nov., 1891 / M. 29 Oct., 1901
SMITH, ALEXANDER D., Vanduara, Springkell avenue, Pollokshields, Glasgow, 2 Nov., 1880
SMITH, HERBERT GARDNER, Leewood, Helensburgh, 26 Nov., 1901
SMITH, HUGH WILSON, Netherby, N. Albert road, Pollokshields, Glasgow, 25 Jan., 1898
SMITH, JAMES, Tinley Manor, Chakas Kraal, Durban, South Africa, 23 Oct., 1888

SMITH, OSBOURNE, Possil Engine works, Glasgow, 24 Dec., 1895

SMITH, ROBERT, c/o Mrs Chisholm, 229 North street, Glasgow, 20 Mar., 1900

SMITH, ROBERT BRUCE, c/o Messrs Bertram Ltd., Engineers, Edinburgh, 20 Jan., 1903

SMITH, WILLIAM J., 7 Newark drive, Pollokshields, Glasgow, 24 Jan., 1899

SNEDDON, RICHARD M., 45c Whifflet street, Coatbridge, G. 21 Nov., 1899 M. 18 Mar., 1902

SNEDDON, W. R., Shipyard, Irvine, 22 Jan., 1901

SNOWBALL, EDWARD, 10 Broomfield terrace, Springburn, Glasgow, 22 Feb., 1870

SOMERVAIL, PETER A., Dalmuir Ironworks, Dalmuir, 25 Jan., 1887

SOMERVILLE, THOMAS A., 12 Abbotsford rd,, Galashiels, 22 Feb., 1898

SOMMERVILLE, ROBERT G., Jun., Aldergrove, Port-Glasgow, 29 Oct., 1901

SOTHERN, JOHN W., 59 Bridge street, Glasgow, 29 Oct , 1901

SPALDING, WILLIAM, 9 Crown Circus road, W., Glasgow, G. 25 Oct., 1892 M. 16 Dec., 1902

SPENCE, WILFRID L., Oakleigh, Alloa, 28 Apr.,1903

SPROUL, A., 34 Union row, Aberdeen, 19 Mar., 1901

STARK, JAMES, 13 Princes gardens, Dowanhill, Glasgow, 27 Oct., 1896

†STEPHEN, ALEXANDER E., 8 Princes terrace, Dowanhill, Glasgow, 18 Dec., 1883

†STEPHEN, FREDERICK J., Linthouse, Govan, 30 Apr., 1895

STEPHEN, J. M., 12 Campania place, Govan, 19 Mar., 1901

*†STEPHEN, JOHN, Linthouse, Govan,

STEVEN, JAMES, Eastvale place, Kelvinhaugh, Glasgow, 23 Oct., 1900

STEVEN, JOHN, Eastvale place, Kelvinhaugh, Glasgow, 26 Oct., 1897

STEVEN, JOHN WILSON, 8 Clarence Drive, Hyndland, Glasgow, 20 Dec., 1898

STEVEN, WILLIAM, 420 Sauchiehall street, Glasgow, 23 Jan., 1894

STEVENS, JOHN, Ayton, Albert drive, Renfrew, 23 Mar., 1897

STEVENSON, WILLIAM F., 49 Park drive, South, Whiteinch, Glasgow, 18 Dec., 1900

STEWART, ALEXANDER W., 55 West Regent Street, Glasgow, 23 Jan., 1894

†STEWART, JAMES, Harbour Engine works, 60 Portman street, Glasgow, 25 Mar., 1890

STEWART, JAMES, Messrs L. Sterne & Co., 155 North Woodside road, Glasgow, 25 Oct., 1898

STEWART, JAMES C., 54 George square, Glasgow, 24 Dec., 1901

STEWART, JOHN GRAHAM, B.Sc., Ault Wharrie, Dunblane, 22 Mar., 1892

STEWART, W. MAXWELL, 55 W. Regent street, Glasgow, 21 Nov., 1899

STRACHAN, ALLAN, Taller Bisayas, Yloilo, Philippine Islands, 18 Mar., 1902

STRACHAN, ROBERT, 55 Clifford street, Ibrox, Govan, 22 Nov., 1898

STRATHERN, ALEXANDER G., Hillside, Steppa, N.B., 25 Apr., 1899

STUART, JAMES, 94 Hope street, Glasgow, 22 Oct., 1889

STUART, JAMES TAIT, 2 Bowmont terrace, Kelvinside, Glasgow, 18 Dec., 1900

SURTEES, FRANCIS VERE, Messrs Lobnitz & Co., Ltd., Renfrew, 19 Feb., 1901

SUTHERLAND, SINCLAIR, North British Tube works, Govan, 21 Dec., 1897

SYME, JAMES, 8 Glenavon terrace, Partick, 23 Jan., 1877

TANNETT, JOHN CROYSDALE, Vulcan works, Paisley, 25 Jan., 1898

TATHAM, STANLEY, Montana, Burton road, Branksome park, Bournemouth, W., G. 21 Dec., 1880 / M. 15 June, 1898

TAVERNER, H. LACY, 48 West Regent street, Glasgow, 22 Dec., 1896

TAYLOR, BENSON, c/o Capt. White, 22 Hayburn crescent, Partick, 20 Nov., 1900

TAYLOR, JAMES, 3 Westminster terrace, Ibrox, Glasgow, 16 Dec., 1902

TAYLOR, PETER, Selby Shipbuilding and Engineering Co., Ltd., Ousegate, Selby, 28 Apr., 1885

TAYLOR, ROBERT, 28 Ardgowan street, Greenock, 27 Oct., 1896

TAYLOR, STAVELEY, Messrs Russell & Company, Port-Glasgow, 25 Mar., 1879

TAYLOR, THOMAS, c/o Messrs Smith, Bell & Co., Manila, Phillipine Islands, 29 Oct., 1901

TERANO, Prof. SEIICHI, College of Engineering, Imperial University, Tōkyō, Japan, 21 Feb., 1899

THEARLE, SAMUEL J. P., 71 Fenchurch Street, London, 22 Dec., 1896

THISTLETHWAITE, JOHN DICKINSON, Mechanical Engineer, Harbours and Rivers Department, Brisbane, Queensland, 28 Apr., 1903

THODE, GEORGE W., 4 Prince Friedrich-Carl Strasse, Rostock, M.S., Germany, 27 Jan., 1885

THOM, JOHN, 8 Park Avenue, Glasgow, 26 Feb., 1889

THOMPSON, W. B., Ellengowan, Dundee, 14 May, 1878

THOMSON, Prof. ARTHUR W., D.Sc., College of Science, Poona, India, 26 Apr., 1887

THOMSON, G. CALDWELL, 23 Elisabeth street, Riga, Russia, 24 Oct., 1893

THOMSON, GEORGE, 14 Caird drive, Partickhill, Glasgow, 18 Dec., 1883

THOMSON, GEORGE, 3 Woodburn terrace, Morningside, Edinburgh, G. 23 Nov., 1880 / M. 20 Nov., 1894

THOMSON, GEORGE C., 53 Bedford road, Rock Ferry, near Birkenhead, { G. 24 Feb., 1874 / M. 22 Oct., 1889

THOMSON, JAMES, Hayfield, Motherwell, { G. 20 Nov., 1894 / M. 20 Nov., 1900

THOMSON, JOHN, 3 Crown terrace, Dowanhill, Glasgow, 20 May, 1868

THOMSON, JOHN, 44 St. Vincent crescent, Glasgow, 26 Nov., 1901

THOMSON, R. H. B., Govan Shipbuilding yard, Govan, 26 Feb., 1895

THOMSON, ROBERT, Messrs Barr, Thomson & Co., Ltd., Kilmarnock, 25 Jan., 1898

THOMSON, WALTER M., Inverclyde, Bothwell, { G. 20 Nov., 1894 / M. 24 Dec., 1895

THOMSON, WILLIAM, 20 Huntly gardens, Kelvinside, Glasgow, { G. 23 Dec., 1884 / M. 27 Oct., 1896

THOMSON, WILLIAM, Royal Institution Laboratory, Manchester, 17 Feb., 1903

TIDD, E. GEORGE, 25 Gordon street, Glasgow, 22 Oct., 1895

TOD, ROBERT P., 27 Regent place, Shawlands, Glasgow, 15 Apr., 1902

TODD, DAVID R., 39-40 Arcade Chambers, St. Mary's Gate and Dean's Gate, Manchester, { G. 25 Jan., 1887 / M. 25 Oct., 1892

TORRIE, JAMES, Stewarton, 18 Mar., 1902

TULLIS, DAVID K., Kilbowie Iron works, Kilbowie, 23 Nov., 1897

TULLIS, JAMES, Kilbowie Iron works, Kilbowie, 23 Nov., 1897

TURNBULL, ALEXANDER, St. Mungo's works, Bishopbriggs, Glasgow, 21 Nov., 1876

TURNBULL, ALEXANDER POTT, 79 West Regent street, Glasgow, 25 Jan., 1898

TURNER, THOMAS, Caledonia works, Kilmarnock, 22 Jan., 1901

WADDELL, JAMES, 15 Moray place, Glasgow, 23 Mar., 1897

WALKER ARCHIBALD, 24 Leadenhall street, London, E.C., 26 Nov., 1901

WALKER, JOHN, 1 Church road, Ibrox, Glasgow, { G. 20 Nov., 1894 / M. 19 Dec., 1899

WALLACE, DUNCAN M., 65 Union street, Greenock, 27 Oct., 1896

WALLACE, JAMES LOCH, 15 Clifford street, Glasgow, S.S., 18 Feb., 1902

WALLACE, JOHN, Jun., 123 East Princes street, Helensburgh, { G. 26 Jan., 1892 / M. 22 Jan., 1901

WALLACE, PETER, Ailsa Shipbuilding Co., Troon, 23 Jan., 1883

WALLACE, W. CARLILE, Atlas Steel and Iron works, Sheffield, 24 Mar., 1885

WARD, J. C. A., Birchmead, Weymouth park, Walton-on-Thames, Surrey, 22 Nov., 1898

WARD, JOHN, Leven Shipyard, Dumbarton, 26 Jan., 1886

WARDE, HENRY W., 69a Waterloo street, Glasgow, 15 June, 1898

WARDEN, WILLOUGHBY C., 25 Gordon street, Glasgow, 24 Mar., 1896

WARNOCK, WILLIAM FINDLAY, 274 Bath street, Glasgow, 21 Jan., 1902

WATKINSON, Prof. W. H., 190 West Regent street, Glasgow, 19 Dec., 1893

WATSON, G. L., 53 Bothwell street, Glasgow, 23 Mar., 1875

WATSON, JAMES W., 6 Kirklee road, Kelvinside, Glasgow, 17 Feb., 1903

WATSON, ROBERT, 10 East Nelson street, Glasgow, G. 22 Mar., 1881 M. 29 Oct., 1901

WATSON, WILLIAM, Clyde Shipping Company, Greenock, 24 Nov., 1896

WATT, ALEXANDER, Inchcape, Paisley, 25 Jan., 1898

WEBB, R. G., Messrs Richardson & Cruddas, Byculla, Bombay, G. 21 Dec., 1875 M. 26 Oct., 1886

WEBSTER, JAMES, Messrs Sharp, Stewart, & Co., Ltd., Atlas works, Springburn, Glasgow, 21 Mar., 1899

WEBSTER, THOMAS LAWSON, 53 Dixon avenue, Glasgow, 21 Nov., 1899

WEDDELL, ALEXANDER H., B.Sc., Park villa, Uddingston, G. 22 Dec., 1896 M. 16 Dec., 1902

WEDDELL, JAMES, Park villa, Uddingston, 22 Dec., 1896

WEDGWOOD, A., Dennystown Forge, Dumbarton, 18 Dec., 1900

WEDGWOOD, ARTHUR D., Forgemaster, Dumbarton, 26 Jan., 1897

WEIGHTON, Prof. R. L., M.A., 2 Park villas, Gosforth, Newcastle-on-Tyne, G. 17 Dec., 1878 M. 22 Nov., 1887

†WEIR, GEORGE, Yass, near Sydney, New South Wales, 22 Dec., 1874

†WEIR, JAMES, Holmwood, 72 St. Andrew's drive, Pollokshields, Glasgow, 22 Dec., 1874

WEIR, JOHN, 46 Laurance street, Partick, G. 22 Apr., 1884 M. 26 Nov., 1895

†WEIR, THOMAS, China Merchants' Steam Navigation Co., Marine Superintendent's Office, Shanghai, China, 23 Apr., 1889

WEIR, THOMAS D., Messrs Brown, Mair, Gemmill & Hyslop, 162 St. Vincent street, Glasgow, G. 19 Dec., 1876 M. 26 Feb., 1884

WEIR, WILLIAM, Holm foundry, Cathcart, Glasgow, G. 28 Jan., 1896 M. 22 Nov., 1898

WEIR, WILLIAM, 231 Elliot street, Glasgow, 22 Jan., 1901

WELSH, JAMES, 3 Princes gardens, Dowanhill, Glasgow, G. 24 Nov., 1885 M. 26 Oct., 1897

WELSH, THOMAS M., 3 Princes gardens, Dowanhill, Glasgow, 17 Feb., 1869

WEMYSS, GEORGE B., 57 Elliot street, Hillhead, Glasgow, G. 28 Nov., 1882 M. 22 Jan., 1901

WEST, HENRY H., 5 Castle street, Liverpool, 23 Dec., 1868

WHITE, RICHARD S., Shirley, Jesmond, Newcastle-on-Tyne, 20 Feb., 1883

WHITEHEAD, JAMES, Howford, Mansewood, Pollokshaws, Glasgow, 6 Apr., 1887

WILLCOX, REGINALD, J. N., Messrs Fleming & Ferguson, Ltd., Paisley, 28 Apr., 1903

WILLIAMS, LLEWELLYN WYNN, B.Sc., Cathcart, Glasgow, 22 Feb., 1898

WILLIAMS, OWEN R., B.Sc., Railway Appliance works, Cathcart, Glasgow, 20 Nov., 1900

WILLIAMS, WILLIAM, 23 Jan., 1900

WILLIAMSON, ALEXANDER, 67 Esplanade, Greenock, 21 Mar., 1899

WILLIAMSON, Sir JAMES, C.B., Admiralty, Whitehall, London, S.W., 23 Dec., 1884

WILLIAMSON, JAMES, Marine Superintendent, Gourock, 24 Mar., 1896

WILLIAMSON, ROBERT, Ormidale, Malpas, near Newport, Mon., 20 Feb., 1883

WILSON, ALEXANDER, Dawsholm Gasworks, Maryhill, Glasgow, 28 Jan., 1896

WILSON, ALEXANDER, Hyde Park Foundry, Finnieston street, Glasgow, 23 Feb., 1897

WILSON, ALEXANDER HALL, B.Sc., Messrs Hall, Russell, & Co., Aberdeen, 23 Oct., 1900

WILSON, DAVID, Arecibo, Porto Rico, West Indies, 25 Oct., 1887

WILSON, GAVIN, 107 Pollok street, S.S., Glasgow, 22 Oct., 1889

†WILSON, JOHN, 165 Onslow drive, Dennistoun, Glasgow, 22 Feb., 1870

WILSON, JOHN, 101 Leadenhall street, London, E.C., 24 Dec., 1895

WILSON, JOHN, 11 Regent Park square, Glasgow, 18 Mar., 1902

WILSON, SAMUEL, 2 Whitehill gardens, Dennistoun, Glasgow, 3 Mar., 1903

WILSON, W. H., 261 Albert road, Pollokshields, Glasgow, 22 Feb., 1898

WILSON, WILLIAM J., Lilybank Boiler works, Glasgow, 30 Apr., 1895

WISHART, THOMAS, London road Iron works, Glasgow, 24 Dec., 1901

WOOD, ROBERT C., c/o Messrs A. Rodger & Co., Shipbuilders, Port Glasgow, 23 Mar., 1897

WORKMAN, HAROLD, B.Sc., c/o Messrs Barclay, Curle & Co., Ltd., Whiteinch, Glasgow, 21 Dec., 1897

WRAY, THOMAS HENRY ROBARTS, Clun house, Surrey street, Strand, London, W.C., 18 Feb., 1902

WRENCH, WILLIAM G., 27 Oswald street, Glasgow, 25 Mar., 1890

WRIGHT, ROBERT, 172 Kilmarnock road, Shawlands, Glasgow, 22 Dec., 1896

WYLIE, ALEXANDER, Kirkfield, Johnstone, 26 Oct., 1897

WYLLIE, JAMES BROWN, Wyllie & Blake, 219 St. Vincent street, Glasgow, { G. 25 Oct., 1887 / M. 26 Jan., 1897

WYNNE, ARTHUR A. W., M.A., Messrs C. A. Parsons & Co., 99 Great Clyde street, Glasgow, 20 Jan., 1903

YOUNG, DAVID HILL, Marine Engineers' Institute, Shanghai, China, { G. 20 Nov., 1900 / M. 15 Apr., 1902

YOUNG, JOHN, Galbraith street, Stobcross, Glasgow, 27 Nov., 1867

YOUNG, THOMAS, Rowington, Whittinghame drive, Kelvinside, Glasgow, 20 Mar., 1894

YOUNG, WILLIAM ANDREW, Millburn House, Renfrew, 26 Mar., 1895
YOUNG, WILLIAM L., 33/35 Stanley street, Kinning Park, Glasgow, 22 Nov., 1898
YOUNGER, A. SCOTT, B.Sc., Westhouse, Dumbreck, Glasgow, 24 Nov., 1896

ASSOCIATE MEMBERS.

ADAM, JOHN WILLIAM, Ferguslie villa, Paisley, 28 Apr., 1903
AINSLIE, JAMES WILLIAM, 377 Bath street, Glasgow, G. 26 Nov., 1901; A.M. 28 Apr., 1903
ANDERSON, GEORGE, 3329 N. 20th street, Tioga, Philadelphia, U.S.A., G. 26 Nov., 1901; A.M. 16 Dec., 1902
ANDERSON, JAMES, c/o Masson, 26 Merryland street, Govan, A. 24 Apr., 1900; A.M. 17 Feb., 1903
ANDERSON, THOMAS, 326 Cumberland street, Glasgow, G. 29 Oct., 1901; A.M. 28 Apr., 1903
ARDILL, WILLIAM, c/o MacIntyre, 939 Sauchiehall street, Glasgow, 17 Feb., 1903

BROWN, WILLIAM, 22 Leven street, Pollokshields, Glasgow, G. 26 Nov., 1901; A.M. 21 Apr., 1903
BUCHANAN, WALTER G., 17 Sandyford place, Glasgow, G. 27 Jan., 1891; A.M. 28 Apr., 1903
BUCKLE, JOSEPH, Bennie place, Renfrew, S. 31 Oct., 1902; A.M 28 Apr., 1903

COCHRAN, ALEXANDER, Messrs Burns & Co., Ltd., Howrah, Calcutta, 3 Mar., 1903
CRAIG, JAMES, B.Sc., Netherlea, Partick, G. 22 Feb., 1859; A.M. 28 Apr., 1903
CRIGHTON, JOHN, Claes de Vrieselaam 137, Rotterdam, Holland, G. 26 Nov., 1901; A.M. 20 Jan., 1903

DRYSDALE, HUGH R. S., 24 Kilmailing terrace, Cathcart, Glasgow, 17 Feb., 1903

DUNLOP, ALEXANDER, 14 Derby terrace, Sandyford, Glasgow, G. 21 Dec., 1897; A.M. 28 Apr., 1903

FALLON, ALFRED H., Bellview, off Craigton road, Govan, 17 Feb., 1903

FAUT, ALEXANDER, 3 Holland place, Glasgow, G. 19 Dec., 1899; A.M. 21 Apr., 1903

FERNIE, JOHN, 6 Edelweiss terrace, Partickhill, Glasgow, S. 31 Oct., 1902; A.M. 28 Apr., 1903

FROST, EVELYN F. M., 76 Hill street, Garnethill, Glasgow, S. 31 Oct., 1902; A.M. 28 Apr., 1903

GALLACHER, PATRICK, 72 Fulbar street, Renfrew, 21 Apr., 1903

HOWIE, WILLIAM, Cathkin View, 14 Crossloan road, Govan, G. 23 Apr., 1901; A.M. 28 Apr., 1903

KELLNER, OSSOKAR, Chapelton, Dumbarton, 17 Feb., 1903

KIRK, JOHN, Oakfield, University avenue, Glasgow, G. 20 Nov., 1894; A.M. 28 Apr., 1903

LEARMONTH, ROBERT, c/o H. Drysdale, 590 Dalmarnock road, Glasgow, G. 26 Nov., 1901; A.M. 21 Apr., 1903

LE CLAIR, LOUIS J., 115 Donore terrace, South Circular road, Dublin, G. 24 Nov., 1896; A.M. 21 Apr., 1903

LEE, JOHN, 10 Bisham gardens, Highgate, London, N., G. 26 Jan., 1886; A.M. 21 Apr., 1903

LYNN, ROBERT R., 7 Highburgh terrace, Dowanhill, Glasgow, 20 Jan., 1903

M'EWAN, JOHN, 3 Norse road, Scotstoun, Glasgow, G. 26 Oct., 1887; A.M. 28 Apr., 1903

M'IVOR, JOHN, Moss cottage, Nitshill Glasgow, 3 Mar., 1903

MACKIE, JAMES, 407 St. Vincent street, Glasgow, G. 23 Mar., 1897; A.M. 28 Apr., 1903

M'LELLAN, ALEXANDER, Clyde Navigation Trust, 16 Robertson street, Glasgow, G. 18 Dec., 1900; A.M. 18 Apr., 1903

MANNERS, EDWIN, 50 M'Culloch street, Pollokshields, Glasgow, 17 Feb., 1903

MILLAR, WILLIAM PETTIGREW, 4 Parkview gardens, Tollcross, Glasgow, G. 18 Dec., 1900; A.M. 17 Feb., 1903

NOWERY, W. F., 46 Elderslie street, Glasgow, G. 21 Dec., 1897; A.M. 28 Apr., 1903

RIDDLESWORTH, W. HENRY, M.Sc., 63 Polworth gardens, Partickhill, Glasgow, G. 24 Oct., 1899; A.M. 28 Apr., 1903

ROBERTSON, ALFRED J. C., Canadian Shipbuilding Co., Ltd., Toronto, Canada, 16 Dec., 1902

ROBERTSON, JOHN, Jun., 7 Maxwell terrace, Shields road, Pollokshields, Glasgow, 20 Jan., 1903

SAUL, GEORGE, Yloilo Engineering works, Yloilo, Phillipine Islands, 21 Apr., 1903

SHEARER, JAMES, 30 M'Culloch street, Pollokshields, Glasgow, 3 Mar., 1903

SMITH, JAMES, 11 Broomhill avenue, Partick, G. 18 Dec., 1900; A.M. 28 Apr., 1903

SMITH, JAMES A., Union Bank house, Virginia place, Glasgow, G. 18 Dec., 1894; A.M. 28 Apr., 1903

SPEAKMAN, EDWARD M., Obelisk cottage, Knutsford, Cheshire, 16 Dec., 1902

STEVENS, THOMAS, 55 Ferry road, Renfrew, 21 Apr., 1903

STEVENSON, GEORGE, Hawkhead, Paisley, G. 22 Nov., 1898; A.M. 24 Mar., 1903

STOBIE, PETER, 33 Kelvinhaugh street, Glasgow, S. 31 Oct., 1902; A.M. 28 Apr., 1903

WELSH, GEORGE MUIR, 3 Princes gardens, Dowanhill, Glasgow, G. 21 Dec., 1897; A.M. 28 Apr., 1903

WOODSIDE, HUGH R., Artnox, Dalry, Ayrshire, 16 Dec., 1902

ASSOCIATES.

ADDIE, FRANK R., 8 Westbourne gardens, Kelvinside, Glasgow,	18 Dec., 1900
*AITKEN, THOMAS, 8 Commercial street, Leith,	
ALLAN, HENRY, 25 Bothwell street, Glasgow,	23 Jan., 1900
†ALLAN, JAMES A., 25 Bothwell street, Glasgow,	29 Oct., 1901
ARMOUR, WILLIAM NICOL, 175 West George street, Glasgow,	24 Nov., 1896
BAILLIE, ARCHIBALD, 14 Park terrace, Queen's Park, Glasgow,	25 Jan., 1898
BAIN, W. B., 65 Waterloo street, Glasgow,	22 Jan., 1901
BARCLAY, THOMAS KINLOCH, 55 Lochleven road, Langside, Glasgow,	20 Mar., 1900
BEGG, WILLIAM, 34 Belmont gardens, Glasgow,	19 Dec., 1886
BLAIR, HERBERT J., 80 Gordon street, Glasgow,	23 Feb., 1897
BORLAND, JOHN G., 93 Hope street, Glasgow,	24 Dec., 1901
BROWN, Capt. A. R., 34 West George street, Glasgow,	21 Dec., 1897
†BROWN, JOHN, B.Sc., 11 Somerset place, Glasgow,	25 Jan., 1876
BROWN, THOMAS J., 233 St. Vincent street, Glasgow,	29 Oct., 1901
BUCHANAN, JAMES, Dalziel Bridge works, Motherwell,	26 Nov., 1901
BURNS, Hon. JAMES C., 80 Jamaica street, Glasgow,	23 Oct., 1900
CASSELS, WILLIAM, Cairndhu, 12 Newark drive, Pollokshields, Glasgow,	21 Feb., 1893
CLAUSSEN, A. L., 118 Broomielaw, Glasgow,	22 Jan., 1892
CLYDE, WALTER P., Messrs T. S. M'Innes & Co., Ltd., 42 Clyde place, Glasgow,	24 Oct., 1899
DEWAR, JAMES, 11 Regent Moray street, Glasgow,	22 Dec., 1897
DODDRELL, EDWARD E., 11 Bothwell street, Glasgow,	26 Oct., 1897
DONALD, JAMES, 123 Hope street, Glasgow,	19 Dec., 1899
FERGUSON, PETER, 19 Exchange square, Glasgow,	27 Apr., 1897
FORREST, WILLIAM, 114 Dixon avenue, Glasgow,	19 Feb., 1901

Names marked thus * were Associates of Scottish Shipbuilders' Association at incorporation with Institution, 1865.

Names marked thus † are Life Associates.

GALLOWAY, JAMES, Jun., Whitefield works, Govan, 27 Oct., 1891
GARDINER, FREDERICK CROMBIE, 24 St. Vincent place Glasgow, 20 Feb., 1900
GARDINER, WILLIAM GUTHRIE, 24 St. Vincent place, Glasgow, 20 Feb., 1900

HOLLIS, JOHN, c/o Messrs John Brown & Co., Ltd., 144 St. Vincent street, Glasgow, 23 Nov., 1897

KINGHORN, WILLIAM A., 81 St. Vincent street, Glasgow, 24 Oct., 1882
KIRSOP, JAMES NIXON, 31 St. Vincent place, Glasgow, 29 Oct., 1901
KYLE, JOHN, Cathay, Forres, N.B., 23 Feb., 1897

LOUDON, JAMES M., 22 Clarenden street, Glasgow, 21 Jan., 1902

M'ARA, ALEXANDER, 65 Morrison street, Glasgow, 22 Nov., 1892
MACBETH, GEORGE ALEXANDER, 65 Great Clyde street, Glasgow, 24 Jan., 1899
MACBRAYNE, LAURENCE, 11 Park Circus place, Glasgow, 26 Mar., 1895
MACDOUGALL, DUGALD, 1 Crosshore street, Greenock, 26 Jan., 1897
M'INTYRE, JOHN, 33 Oswald street, Glasgow, 23 Feb., 1897
M'INTYRE, T. W., 21 Bothwell street, Glasgow, 24 Jan., 1893
MACLAY, JOSEPH P., 21 Bothwell street, Glasgow, 18 Dec., 1900
M'LEOD, NORMAN, 53 Bothwell street, Glasgow, 20 Feb., 1900
M'PHERSON, Captain DUNCAN, 8 Royal crescent, Cross-hill, Glasgow, 26 Jan., 1886
MANN, WILLIAM, Whitecraigs, Giffnock, 20 Feb., 1900
MERCER, JAMES B., Broughton Copper works, Manchester, 24 Mar., 1874
MILLAR, THOMAS, Hazelwood, Langside, Glasgow, 22 Mar., 1898
MILLER, T. B., Sandilands, Aberdeen, 18 Dec., 1900
MOWBRAY, ARCHIBALD H., c/o Messrs Smith & M'Lean, Mavisbank, Glasgow, 22 Feb., 1898
MURRAY, JOHN BRUCE, 24 George square, Glasgow, 18 Mar., 1902

NAPIER, JAMES, 33 Oswald street, Glasgow, 22 Jan., 1901
*NAPIER, JAMES S., 33 Oswald street, Glasgow,

PAIRMAN, THOMAS, 54 Gordon street, Glasgow, 23 Jan., 1900
PRENTICE, THOMAS, 53 Bothwell street, Glasgow, 24 Nov., 1896

RAEBURN, WILLIAM HANNAY, 81 St. Vincent street, Glasgow, 20 Feb., 1900
REID, JOHN, 30 Gordon street, Glasgow, 22 Dec., 1896
RIDDLE, JOHN C., 8 Gordon street, Glasgow, 15 June, 1898
ROBERTS, WILLIAM IBBOTSON, Rawmoor, Sheffield, 15 June, 1898
ROBERTSON, WILLIAM, Oakpark, Mount Vernon, 27 Apr., 1897
ROBINSON, DAVID, 14 Broomhill avenue, Partick, 16 Dec., 1902
ROSS, THOMAS A., Glenwood, Bridge-of-Weir, 20 Mar., 1894
ROXBURGH, JOHN ARCHIBALD, 3 Royal Exchange square, Glasgow, 20 Feb., 1900

SERVICE, GEORGE WILLIAM, 53 Bothwell street, Glasgow, 24 Nov., 1896
SERVICE, WILLIAM, 54 Gordon street, Glasgow, 23 Jan., 1900
SLOAN, GEORGE, 53 Bothwell street, Glasgow, 20 Feb., 1900
SLOAN, WILLIAM, 53 Bothwell street, Glasgow, 20 Feb., 1900
†SMITH, GEORGE, 75 Bothwell street, Glasgow, 22 Jan., 1901
SMITH, JOHN, 2 Doune quadrant, Kelvinside, Glasgow, 22 Feb., 1898
SOTHERN, ROBERT M., 59 Bridge street, Glasgow, 18 Feb., 1902
STEWART, CHARLES R., Messrs J. Stone & Co., 46 Gordon street, Glasgow, 29 Oct., 1901
STEWART JOHN G., 65 Great Clyde street, Glasgow, 18 Dec., 1900
STRACHAN, G., Fairfield works, Govan, 26 Oct., 1897

TAYLOR, FRANK, c/o Messrs Alexander Young & Co., 50 Wellington street, Glasgow, 24 Dec., 1901
TAYLOR, WILLIAM GILCHRIST, 123 Hope street, Glasgow, 23 Jan., 1900
THOMSON, WILLIAM H., 32 Albert Road East, Crosshill, Glasgow, 19 Feb., 1901

WARREN, ROBERT G., 94 Hope street, Glasgow, 28 Jan., 1896
*WATSON, H. J., 134 St. Vincent street, Glasgow,
WEIR, ANDREW, 102 Hope street, Glasgow, 25 Jan., 1898
WHIMSTER, THOMAS, 67 West Nile street, Glasgow, 24 Oct., 1899
WILD, CHARLES WILLIAM, Broughton Copper Company, Limited, 49-51 Oswald street, Glasgow, 24 Mar., 1896

WILLIAMSON, JOHN, 99 Great Clyde street, Glasgow, 28 Apr., 1903
WREDE, FREDERICK LEAR, 25 Bentinck street, Greenock, 25 Jan., 1898

YOUNG, JOHN D., Scottish Boiler Insurance Company, 111 Union street, Glasgow, 19 Dec., 1882
YOUNG, ROBERT, Baltic Chambers, 50 Wellington street, Glasgow, 16 Dec., 1902

STUDENTS.

AGNEW, WILLIAM H., Messrs. Laird Brothers, Birkenhead, 28 Nov., 1882
AITCHISON, JOHN WILSON, 213 Watt street, Glasgow, 20 Nov., 1900
AITKEN, JOHN, Beech cottage, Balshagray avenue, Partick, 28 Apr., 1903
ALEXANDER, ROBERT, 33 Melville street, Portobello, 23 Oct., 1900
ALEXANDER, WILLIAM, 31 Kelvingrove street, Glasgow, 19 Mar., 1901
ALISON, ALEXANDER E., Devonport, Auckland, New Zealand, 22 Nov., 1898
ALLAN, FREDERICK WM., 8 Gillsland road, Edinburgh, 21 Nov., 1899
ALLAN, JAMES, 326 W. Princes street, Glasgow, 24 Jan., 1888
ANDERSON, ADAM R., Harbour works, Durban, Natal, South Africa, 23 Mar., 1897
ANDERSON, GEORGE C., 13 Balmoral drive, Cambuslang, 24 Dec., 1895
Ap.-GRIFFITH, YWAIN GORONWY, Brynkynallt, Bangor, North Wales, 3 Mar., 1903
ARBUTHNOTT, DONALD S., c/o Messrs Charles Brand & Son, 172 Buchanan street, Glasgow, 23 Oct., 1888
ARUNDEL, ARTHUR S. D., Penn street works, Hoxton, London, N., 23 Dec., 1890
BARNWELL, FRANK SOWTER, Elcho house, Balfron, 18 Feb., 1902
BARNWELL, RICHARD HAROLD, Elcho house, Balfron, 18 Feb., 1902
BARTY, THOMAS, 218 West Regent street, Glasgow, 24 Oct., 1899
BARTY, THOMAS PATRICK WILLIAM, c/o Messrs. Forman & M'Coll, 160 Hope street, Glasgow, 18 Dec., 1900
BENNETT, DUNCAN, 9 Leslie street, Pollokshields, Glasgow, 26 Oct., 1897
BERRY, DAVIDSON, 21 Grange terrace, Langside, Glasgow, 19 Mar., 1901
BERTRAM, R. M., 9 Walmer road, Toronto, Canada, 24 Jan., 1899

BINLEY, WILLIAM, Jun., Naval Constructor's Office, Brooklyn Navy Yard, Brooklyn, U.S.A., 21 Mar., 1899
BISSET, JOHN, 35 Harriet street, Pollokshaws, Glasgow, 18 Dec., 1900
BLACK, JAMES, 3 Clarence street, Paisley, 18 Dec., 1900
BLACK, J. W., 51 Montgomerie street, Kelvinside, Glasgow, 25 Oct., 1892
BLAIR, ARCHIBALD, 15 Craigmore terrace, Partick, 27 Oct., 1885
BLAIR, ARCHIBALD, 25 Peel street, Partick, 27 Oct., 1891
BONE, QUINTIN GEORGE, 5 University avenue, Hillhead, Glasgow, 19 Dec., 1899
BOWMAN, W. D., 21 Kersland terrace, Hillhead, Glasgow, 22 Dec., 1891
BROOKFIELD, JOHN W., 21 Peel street, Partick, 18 Feb., 1902
BROWN, ALEXANDER TAYLOR, 2 Parkgrove terrace, Sandyford, Glasgow, 26 Oct., 1897
BROWN, DAVID A., 57 St. Vincent crescent, Glasgow, 23 Feb., 1897
BROWN, J. POLLOCK, 2 Park Grove terrace, Glasgow, 18 Dec., 1894
BROWN, WILLIAM L., 99 Grant street, Glasgow, 31 Oct., 1902
BRYSON, WILLIAM, 21 Cartvale road, Langside, Glasgow, 24 Oct., 1899
BUCHANAN, JOSHUA MILLER, 7 Glenton terrace, Kelvinside, Glasgow, 21 Nov., 1899
BUNTEN, JAMES C., Sheriff Riggs, Rutherglen, 20 Nov., 1900
BUTLER, JAMES S., 21 Hamilton terrace, W., Partick, 22 June, 1901

CALDER, JOHN, 18 St. Austin's place, West New Brighton, New York, U.S.A., 24 Feb., 1891
CALLANDER, WILLIAM, 100 Bothwell street, Glasgow, 24 Dec., 1901
CAMERON, ANGUS JOHNSTONE, c/o Mrs Granger, 5 Osborne place, Copland road, Govan, 20 Nov., 1900
CAMERON, HUGH, 40 Camperdown road, Scotstoun, Glasgow, 25 Oct., 1892
CAMPBELL, ANGUS, 90 Southgrove road, Sheffield, 24 Jan., 1888
CARSLAW, WILLIAM H., Jun., Parkhead Boiler works, Parkhead, Glasgow, 23 Dec., 1890
CARTER, DOUGLAS R., Cockburn Hotel, 141 Bath street, Glasgow, 18 Dec., 1900
CLARK, JAMES MILLER, M.A., B.Sc., 8 Park drive, W., Glasgow, 16 Dec., 1902
COCHRANE, JAMES, Resident Engineer's Office, Harbour works, Table Bay, Capetown, 27 Oct., 1891
COCHRANE, JOHN, 15 Ure place, Montrose street, Glasgow, 24 Dec., 1901
CONNELL, WILLIAM, 174 Claythorn street, Glasgow, 20 Nov., 1900
CRAN, J. DUNCAN, 11 Brunswick street, Edinburgh, 21 Jan., 1902
CUBIE, ALEXANDER, Jun., 2 Newhall terrace, Glasgow, 23 Jan., 1900

CUNNINGHAM, P. NISBET, Jun., Easter Kennyhall house, Cumbernauld road, Glasgow,	22 Nov., 1898
CUTHBERT, JAMES G.,	21 Nov., 1899
DAVIDSON, WILLIAM J. J., 7 Bellevue crescent, Edinburgh,	22 Nov., 1898
DEKKE, KRISTIAN S., Bergen, Norway,	22 Dec., 1891
DE SOLA, JUAN GARCIA, Sacramento, 57, Cadiz, Spain,	20 Mar., 1900
DEVERIA, LEWIS M. T., c/o Messrs P. M'Intosh & Son, 129 Stockwell street, Glasgow,	10 Feb., 1883
DIACK, JAMES A., 4 Rosemount terrace, Ibrox, Glasgow,	22 Jan., 1895
DIAS, CHRISTOPHER, c/o Gow, 273 Dumbarton road, Glasgow,	16 Dec., 1902
DICKIE, JAMES S., San Mateo, California,	19 Dec., 1899
DOBBIE, ROBERT B., 15 Leander Road, Brixton Hill, London, S.W.,	24 Oct., 1899
DOBSON, JAMES, c/o Messrs Pooley & Son, Kidsgrove, Staffordshire,	22 Dec., 1896
DORNAN, JAMES F. A., 21 Minerva street, Glasgow,	20 Jan., 1903
DRYSDALE, WILLIAM, Craigard, Dennistoun, Glasgow,	16 Dec., 1902
DUNCAN, ALEXANDER, c/o E. G. Fraser Luckie, Esq., Hacienda, Andalusia, Huacho, Sayou, Peru,	23 Apr., 1901
DUNCAN, JAMES GRIEVE, 34 Blantyre street, Overnewton, Glasgow,	22 Nov., 1898
DUNSMUIR, GEORGE, Matheran, Dumbreck, Glasgow,	21 Apr., 1903
DYER, HENRY,	18 Dec., 1900
EDMISTON, ALEXANDER A., Ibrox house, Govan,	22 Feb., 1898
FAIRLEY, JOHN, 124 Pitt street, Glasgow	21 Nov., 1899
FAIRWEATHER, GEORGE A. E., Elmwood, Avon street, Motherwell,	26 Nov., 1901
FERGUS, ALEXANDER, 7 Ibrox place, Glasgow,	22 Dec., 1891
FERGUSSON, W. L., 48 Connaught road, Roath, Cardiff,	22 Dec., 1891
FINDLATER, JAMES, 124 Pollok street, Glasgow, S.S.,	19 Dec., 1899
FINDLAY, LOUIS, 50 Wellington street, Glasgow,	21 Feb., 1893
FISH, N., 69 Mayfair avenue, Ilford, Essex,	18 Feb., 1902
FRANCE, JAMES, 8 Hanover terrace, Kelvinside, Glasgow,	26 Oct., 1897
FRASER, J. IMBRIE, 13 Sandyford place, Glasgow,	27 Apr., 1886

GALBRAITH, HUGH, 2 Hillside villa, Kentish road, Belvidere, Kent, 20 Dec., 1898

GALLOWAY, ANDREW, 47 Park View gardens, Glasgow, S., 24 Oct., 1893

GIBB, JOHN, 276 Crow road, Partick, 24 Jan., 1899

GIBSON, ROBERT E., Engineer's Department, S. Eastern and Chatham and Dover Railway, 84 Tooley street, London, S.E., 25 Jan., 1898

GILMOUR, ALEXANDER, Barrhead, 22 Nov., 1898

GILMOUR, ANDREW, c/o Mrs Gibson, 118 Prince Albert street, Crosshill, Glasgow, 20 Dec., 1898

GOURLAY, JAMES, B.Sc., Messrs J. H. Carruthers & Co., Hamilton street, Polmadie, Glasgow, 27 Oct., 1891

GOURLAY, R. CLELAND, Endyne, Oakshaw street, Paisley, 24 Dec., 1895

GOVAN, WILLIAM A. W., 15 Renfield street, Glasgow, 18 Dec., 1894

GRANT, WILLIAM, Croft park, High Blantyre, 24 Oct., 1899

GRENIER, JOSEPH R., 352 St. Vincent street, Glasgow, 3 Mar., 1903

HAIGH, BERNARD PARKER, 6 Elmwood gardens, Jordanhill, 20 Jan., 1903

HAMILTON, WALTER, c/o Drummond, 360 Pollokshaws road, Glasgow, 21 Nov., 1899

HANNAH, JOHN A., 23 Govanhill street, Glasgow, 26 Nov., 1901

HENDERSON, CHARLES A., The Basin House, Exeter, 24 Jan., 1899

HENDERSON, H. E., 32 Curzon road, Waterloo, near Liverpool, 22 Nov., 1898

HENRICSON, JOHN A., c/o A. B. Sandoikens, Skeppsdocka, och Mek, Varkstad, Helsingfors, Finland, 19 Dec., 1899

HERSCHEL, A. E. H., 2 Glenavon terrace, Crow road, Partick, 19 Dec., 1899

HOLLAND, HENRY NORMAN, Metropolitan Electric Supply Co, Willesden Works, London, N.W., 22 Nov., 1898

HOLMES, JAMES, 25 St. James street, Paisley, 17 Feb., 1903

HORN, PETER ALLAN, 201 Kent road, Glasgow, 26 Oct., 1897

HOTCHKIS, MONTGOMERY H., Crookston house, near Paisley, 24 Dec., 1901

HOUSTON, PERCIVAL T., 22 Lancaster Gate, London, 22 Nov., 1898

HOWSON, GEORGE, Eskdale, 6 Lawrence road, South Norwood, London, S.E., 22 Dec., 1891

HUTCHISON, ROBERT, c/o Messrs. Burns & Co., Engineers, Howrah, near Calcutta. 24 Oct., 1899

HUTTON, W. R., Jun., Lenore, Park Grove, Whiteinch, Glasgow, 23 Apr., 1901

INNES, W., 11 Walmer terrace, Glasgow,	22 Feb., 1898
IRONS, JAMES HAY, 4 Albert drive, Crosshill, Glasgow,	19 Feb., 1901
IRVINE, ARCHIBALD B., 8 Newton terrace, Glasgow,	20 Nov., 1894
JACK, CHARLES, P. M., 17 Albert drive, Pollokshields, Glasgow,	20 Nov., 1900
JACKSON, WILLIAM S., 109 Hope street, Glasgow,	29 Oct., 1901
JENKINS, CHARLES E., 100 Bothwell street, Glasgow,	3 Mar., 1903
JOHNSTONE, ALEXANDER C., 167 Langside road, Glasgow,	25 Jan., 1898
JOHNSTONE, ROBERT, c/o Mrs M'Vicar, 20 Rothesay gardens, Partick,	26 Apr., 1898
JONES, T. C., Kent Avenue, Jordanhill, Glasgow,	23 Nov., 1897
KEMP, ROBERT G., 1 Thornwood terrace, Partick,	28 Oct., 1890
KERMEEN, ROBERT W.,	18 Mar., 1902
KIMURA, N., Tokio, Kai-ji-Kioku, Tokyo, Japan,	23 Apr., 1901
KING, CHARLES A., 12 Kew gardens, Kelvinside, Glasgow,	25 Apr., 1893
KINGHORN, DAVID RICHARD, Ardoch, Prenton, Cheshire,	23 Oct., 1900
KNOX, ALEXANDER, 10 Westbank terrace, Hillhead, Glasgow,	23 Nov., 1897
KOLVIG, WILLIAM,	26 Nov , 1901
LAMB, STUART, Engineer's Office, St. Enoch Station, Glasgow,	23 Jan., 1900
LAMONT, THOMAS W., Hawkhead works, Paisley,	22 Nov., 1892
LAUDER, THOMAS H., Parkhead forge, Glasgow,	19 Dec., 1893
LAW, ALEXANDER, 138 Cambridge drive, Kelvinside, Glasgow,	26 Apr., 1898
LEITCH, WILLIAM ORR, Jun., Imperial Chinese Railway, Tientsin, North China,	22 Dec., 1891
LESLIE, ALFRED, 148 Hill street, Garnethill, Glasgow,	23 Oct., 1900
LESLIE, JOHN, Struan, Victoria drive, Scotstounhill, Glasgow,	20 Dec., 1892
LLOYD, HERBERT J., Breacan road, Builth, Wales,	21 Dec., 1897
LOADER, EDMUND T., Y.M.C.A. Club, 100 Bothwell Street, Glasgow,	20 Nov., 1900
LORIMER, ALEXANDER SMITH, Kirklinton, Langside, Glasgow,	21 Nov., 1899

LORIMER, HENRY DUBS, Kirklinton, Langside, Glasgow, 21 Nov., 1899
LOWE, JAMES, c/o Mrs Waddell, 33 Nithsdale road, Glasgow, 24 Oct., 1899
LOWE, ROBERT, 230 Kenmure street, Pollokshields, Glasgow, 22 Jan., 1901

M'ARTHUR, ARCHIBALD, 91 Hyndland street, Partick, 24 Jan., 1893
MACCALLUM, PATRICK F., The Athenæum, Glasgow, 22 Nov., 1880
M'CULLOCH, JOHN, 2 Willowbank crescent, Glasgow, 23 Oct., 1900
MACDONALD, JOHN F., 16 Ruthven street, Kelvinside, Glasgow, 21 Dec., 1897

MACEWAN, HENRY, 5 Wendover cres., Mount Florida, Glasgow, 27 Oct., 1891
MACFARLANE, DUNCAN, Jun., 28 Ancaster drive, Anniesland, Glasgow, 26 Oct., 1897
M'GILVRAY, JOHN A., 25 Hutton drive, Govan, Glasgow, 26 Oct., 1897
MACGREGOR, J GRAHAM, 4 West George street, Glasgow, 18 Feb., 1902
M'GREGOR, JOHN L., Coatbank Engine works, Coatbridge, 28 Jan., 1896
M'HARG, W. S, The Grove, Ibrox, Glasgow, 19 Mar., 1901
M'HOUL, JOHN B., 2 Windsor terrace, Langside, Glasgow, 24 Jan., 1899
M'INTOSH, GEORGE, Dunglass, Bowling, 22 Jan., 1895
M'INTOSH, JOHN, 5 Douglas terrace, Paisley, 22 Jan., 1895
M'INTYRE, JAMES N., Stalheim, Scotstounhill, Glasgow, 20 Nov., 1900
MACKINTOSH, ROBERT D., P.O. Box 6075, Johannesburg, South Africa, 20 Nov., 1894
MACKAY, HARRY J. S., Rosemount, Stockport road, Chorlton-cum-Hardy, Manchester, 22 Feb., 1898
MACKAY, W. MORRIS, c/o Stenhouse, 87 St. George's Mansions, Glasgow, 22 Jan., 1901
M'KEAN, JOHN G., 23 Oct., 1900
M'LACHLAN, CHARLES ALEX., 8 Queen's crescent, Cathcart, Glasgow, 21 Apr., 1903
MACLAREN, JAMES ERNEST, 3 Porter street, Bellahouston, Glasgow, 23 Oct., 1900
M'LAURIN, JAMES H., 34 Park circus, Ayr, 18 Dec., 1900
M'LAY, J. A., Rose Lea, Uddingston, 17 Feb., 1903
MCLEAN, JOHN, 1 Cannon street, Dover, 21 Nov., 1899
MACNICOLL, DONALD, Griffe Craig, Kilmalcolm, 23 Apr., 1901
M'RAE, JOHN, 16 Flemington street, Springburn, Glasgow, 18 Dec., 1900

M'WHIRTER, ANTHONY C., 1009 State street, Schenectady, N.Y., U.S.A., 21 Dec., 1897

MARSHALL, ALEXANDER, Brightons, Polmont station, 18 Mar., 1902

MARTIN, GEORGE H., 2 Levenford terrace, Dumbarton, 26 Nov., 1901

MAITLAND, JOHN M., 13 Rosslyn terrace, Glasgow, 22 Jan., 1901

MATHER, JOHN BOYD, Kirkhill, Mearns, 20 Mar., 1894

MELENCOVICH, ALEXANDRE, 21 Peel street, Partick, 31 Oct., 1902

MELVILLE, ALEXANDER, Engineer's Office, Maidens and Dunure Light Railway, Alloway, Ayr, 20 Feb., 1900

MENZIES, GEORGE, 20 St Vincent crescent, Glasgow, 22 Jan., 1889

MERCER, JOHN, c/o Mrs M'Culloch, 25 White street, Partick, 22 Oct., 1895

MILLAR, ALEX. SPENCE, Towerlands, Octavia terrace, Greenock, 16 Dec., 1902

MILLAR, JOHN S., 22 Rothesay gardens, Partick, 20 Nov., 1894

MILLAR, THOMAS, Messrs Sir W. G. Armstrong, Whitworth & Co., Ltd., Walker Shipyard, Newcastle-on-Tyne, 25 Nov., 1884

MILLER, JAMES, 24 Melrose gardens, Kelvinside, Glasgow, 22 Nov., 1898

MILLER, JAMES WILLIAM, 84 Portland place, London, W., 20 Dec., 1898

MILLER, JOHN, Etruria villa, South Govan, 28 Apr., 1889

MILLER, ROBERT F., Messrs Wardlaw & Miller, 109 Bath street, Glasgow, 25 Feb., 1890

MILLIKEN, GEORGE, Milton house, Callander, 18 Feb., 1902

MITCHELL, CHARLES, 25 Jan., 1898

MITCHELL, R. M., 24 Howard street, Bridgeton, Glasgow, 23 Nov., 1897

MORGAN, ANDREW, 20 Minerva street, Glasgow, 18 Dec., 1900

MORISON, THOMAS, 50 St. Vincent crescent, Glasgow, 21 Nov., 1899

MORLEY, JAMES STEEL, 5 Walmer terrace, Copland road, Govan, 20 Feb., 1900

MORRISON, A., Alt-na-craig, Greenock, 23 Nov., 1897

MORTON, CHARLES C., Ingleside, Waterloo Park, Liverpool, 25 Jan., 1898

MORTON, W., REID, Strathview, Bearsden, 26 Oct., 1897

MUIR, ANDREW A., Horshay Engineering Works, Horshay, R.S.O., Shropshire, 22 Nov., 1898

MUIR, JAMES H., 76 Hill street, Garnethill, Glasgow, 26 Jan., 1892

MUIRHEAD, WILLIAM, Cloberhill, Knightswood, Maryhill, Glasgow, 28 Apr., 1891

MUNDY, H. L., Ormsby Hall, Alford, Lancs., 24 Oct., 1899

NEIL, ROBERT, 8 Dundrennan road, Langside, Glasgow, 20 Mar., 1900

NEILL, HUGH, Jun., 99 Clarence drive, Hyndland, Glasgow, 21 Nov., 1899
NEWTON, CHARLES A., 47 Full street, Derby, 25 Jan., 1898
NIVEN, JOHN, c/o Messrs Lynch, Basreh, Persian Gulf, 22 Nov., 1898

ORR, J., 964 Craigmaddie terrace, W., Glasgow, 22 Oct., 1895
ORR, Prof. JOHN, B.Sc., South African College, Cape Town, 26 Mar., 1895
OSBORNE, HUGH, 31 Broomhill terrace, Partick, 22 Dec., 1891
OSBORNE, MARSHALL, The British Thomson Houston Co., Ltd., 9 Scottish Provident Buildings, Donegall square, W., Belfast, 22 Dec., 1891

PATERSON, GEORGE, 27 White street, Partick, 18 Dec., 1900
PATERSON, JAMES V., 307 Walnut street, Philadelphia, U.S.A., 24 Jan., 1888
PATERSON, JOSEPH BARR, c/o Harvey, 32 White street, Partick, 22 Mar., 1898
PATON, THOMAS, 19 Binnie street, Greenock, 20 Dec., 1892
PIGGOTT, JOSEPH T., 15 St. George Square, Regent Park road, London, N.W., 23 Jan., 1900
POLLOCK, GILBERT F., 10 Beechwood drive, Tollcross, Glasgow, 27 Jan., 1891
POLLOK, JOHN, Portland park, Hamilton, 22 Feb., 1898
PORTCH, ERNEST C., 37 Vicars hill, Ladywell, Kent, 26 Oct., 1897
PRENTICE, HUGH, Box No. 105, Postal Station B., Cleveland, Ohio, U.S.A., 26 Apr., 1898
PRESTON, JOHN C., 343-5 Sussex street, Sydney, New South Wales, 6 Apr., 1887

RALSTON, SHIRLEY B., Messrs Summers & Payne, Ltd., Boatbuilders, Southampton, 23 Feb., 1897
RAMSAY, JOHN C., 72 Norse road, Scotstoun, Glasgow, 19 Feb., 1901
RAPHAEL, ROBERT A., 150 Renfrew street, Glasgow, 24 Dec., 1895
REID, DAVID H., Beresford Villa, Ayr, 25 Oct., 1887
REID, HENRY P., 12 Grantly gardens, Shawlands, Glasgow, 20 Dec., 1898
REID, JAMES, 128 Dumbarton road, Glasgow, 22 Oct., 1895
RICHMOND, TOM, 4 Rosemount terrace, Ibrox, Glasgow, 20 Feb., 1900
RITCHIE, JAMES, Poplar villas, New Moston, Manchester, 26 Oct., 1897
ROBERTS, JAMES, c/o Mrs Pollock, 9 Walmer ter., Ibrox, Glasgow, 23 Apr., 1901

ROBERTSON, ALEXANDER, 8 Darnley road, Pollokshields, Glasgow, 26 Oct., 1886

ROBERTSON, ROBERT M., 1 Holmhead terrace, Cathcart, Glasgow, 15 Apr., 1902

RODGER, ANDERSON, Jun., Glenpark, Port-Glasgow, 15 June, 1898

ROSS, J. R., 64 Sandyford street, Glasgow, 25 Oct., 1898

ROSS, THOMAS C., Jun., 13 Hampden terrace, Mount Florida, Glasgow, 21 Apr., 1903

RUSSELL, ALEXANDER C., 655 Hawthorn street, Springburn, Glasgow, 15 Apr., 1902

RUSSELL, JAMES, 41 Ardgowan street, Greenock, 22 Dec., 1891

SADLER, JOHN, 551 Sauchiehall street, Glasgow, 23 Oct., 1900

SANGUINETTI, W. ROGER, Public Works Department, Selangor, Malay States, 20 Feb , 1900

SAYERS, W. H., 100 Bothwell street, Glasgow, 19 Mar., 1901

SCOBIE, ALEXANDER, 454 Dumbarton road, Partick, 27 Oct., 1885

SCOTT, G. N., 7 Corunna street, Glasgow, 17 Feb., 1903

SCOTT, THOMAS R., 23 Lismore crescent, Edinburgh, 22 Dec., 1896

SEATH, THOMAS R., Sunny Oaks, Langbank, 23 Mar., 1886

SEATH, WILLIAM Y., Sunny Oaks, Langbank, 23 Mar., 1886

SEMPLE, WILLIAM, Coral Bank, Bertrohill road, Shettleston, 21 Jan., 1902

SERVICE, WILLIAM, 173 West Graham street, Glasgow, 26 Nov., 1901

SEXTON, GEORGE A., c/o Prof. Sexton, G. & W. of S. Technical College, Glasgow, 24 Nov., 1896

SHARP, JAMES R., c/o Weir, West Glentore place, Airdrie, 24 Oct., 1899

SHARPE, WILLIAM, B.Sc., Engineer-in-Chief's office, Natal Government Railway, Maritzburg, Natal, 24 Dec., 1895

SIBBALD, THOMAS KNIGHT, c/o Messrs Cook & Son, Ltd., Cairo, Egypt, 26 Oct., 1897

SIMPSON, DAVID C., Assistant Mechanical Superintendent, Mersey Dock and Harbour Board Dockyard, Liverpool, 20 Dec , 1892

SLOAN, JOHN ALEXANDER, 37 Annette street, Crosshill, Glasgow, 25 Jan., 1898

SMITH, ALEXANDER, c/o Messrs Scott & Co., Engine Drawing Office, Kinghorn, 24 Dec., 1901

SMITH, CHARLES, 3 Rosemount terrace, Ibrox, Glasgow, 24 Apr., 1894

SMITH, GEORGE F., "The Pequot," 1300 Pine street, Philadelphia, U.S.A., 26 Oct., 1897

SMITH, JAMES, 23 Barrington drive, Glasgow, 20 Dec., 1892

SMITH, JAMES, 44 Cleveland street, Glasgow, 31 Oct., 1902

SMITH, JAMES S., 5 Mona Terrace, Gourock,	22 Nov., 1898
SMITH, WILLIAM, 13 Minerva street, Glasgow,	28 Apr., 1903
SPERRY, AUSTIN, 2100 Pacific avenue, San Francisco, U.S.A.,	23 Mar., 1897
SPROUL, JOHN, c/o Park, 37 Wellmeadow street, Paisley,	3 Mar., 1903
STARK, JAMES, Penang, Straits Settlements,	22 Dec., 1891
STEELE, DAVID J., Davaar, Albert drive, Pollokshields, Glasgow,	20 Dec., 1898
STEVEN, DAVID M., 9 Princes terrace, Dowanhill, Glasgow,	15 June, 1898
STEVEN, J. M., Applegarth, Helensburgh,	20 Dec., 1892
STEVEN, JOHN A., 12 Royal crescent, Glasgow,	22 Nov., 1881
STEVENS, CLEMENT H., c/o Messrs Blandy Bros. & Co., Las Palmas, Grand Canary,	22 Dec., 1891
STEVENSON, ALLAN, 108 Dundrennan road, Langside, Glasgow,	26 Nov., 1901
STEVENSON, GEORGE, c/o Reid, 145 Garthland drive, Dennistoun, Glasgow,	24 Apr., 1900
STEVENSON, WILLIAM, Bank Chambers, Sandhill, Newcastle-on-Tyne,	25 Jan., 1881
STEWART, DONALD, 125 Great Western road, Glasgow,	17 Feb., 1903
STIRLING, ANDREW, Messrs Denny & Co., Engine works, Dumbarton,	21 Dec., 1875
SWAN, JAMES, 1536 Pine street, Philadelphia, U.S.A.,	23 Mar., 1897
SYMINGTON, JAMES R., Messrs Butterfield & Swire, Hong Kong, China,	21 Dec., 1886
TAYLOR, ANDREW P., 47 St. Vincent crescent, Glasgow,	19 Dec., 1899
TAYLOR, J. F., 23 Roslea drive, Dennistoun, Glasgow,	23 Nov., 1897
THOMAS, NEVILL SENIOR, 3 Church road, Penarth, near Cardiff,	24 Mar., 1903
THOMSON, GRAHAME H., Jun., 2 Marlborough terrace, Glasgow,	22 Feb., 1898
TOD, PETER, c/o Messrs E. H. Williamson & Co., Engineers, Lightbody street, Liverpool,	27 Oct., 1885
TOD, WILLIAM, c/o Mrs Ogilvie, 8 Ardgowan terrace, Sauchiehall street, Glasgow,	22 Feb., 1898
TURNBULL, CAMPBELL, 190 West George street, Glasgow,	27 Oct., 1891
TURNBULL, JAMES, Basford house, Seymour grove, Manchester,	22 Mar., 1892
TURNBULL, W. L., 190 West George street, Glasgow,	27 Oct., 1891

WALLACE, HUGH, Jun., Nautglyn, Coventry,	24 Oct., 1899
WANNOP, CHARLES H., Messrs Alexander Stephen & Sons, Linthouse, Glasgow,	24 Feb., 1885
WARD, G. K., Lloyds' Register of Shipping, 324 The Bourse, Philadelphia, U.S.A.,	23 Apr., 1901
WARD, JOHN, Jun., Rockvilla, Dumbarton,	23 Apr., 1901
WATSON, JAMES, 35 Regent Moray street, Glasgow,	24 Dec., 1901
WATSON, JOHN, c/o Alexander Fleming, Esq., 9 Woodside crescent, Glasgow,	22 Nov., 1898
WATT, HARRY, 4 Sharrocks street, Ibrox, Glasgow,	20 Dec., 1892
WATT, ROBERT D., Messrs Butterfield & Swire, French Bund, Shanghai, China,	27 Apr., 1880
WHITEHEAD, JOHN, Eccleston, Wallace st., Kilmarnock,	18 Dec., 1883
WHITELAW, ANDREW H., 74 Dundonald road, Kilmarnock,	20 Nov., 1900
WILLIAMSON, ALEXANDER, Craiglarnet, Greenock,	20 Nov., 1900
WILSON, THOMAS, 66 Alexandra parade, Glasgow,	20 Feb., 1900
WINDELER, GEO. EDWARD, The Mirrlees Watson Co., Glasgow,	31 Oct., 1902
WITHY, VIVIAN, Kenmore Bowling Green terrace, Whiteinch, Glasgow,	31 Oct., 1902
WOODS, JOSEPH, 58 Dudley road, Ilford, Essex,	25 Feb., 1896
YOUNG, GEORGE M., B.Sc., 268 Kenmure street, Pollokshields, Glasgow,	24 Dec , 1901
YOUNG, JAMES M., 39 King street, Pollokshaws, Glasgow,	22 Jan., 1901
YOUNG, J. M., Ravenscraig, Ardrossan,	17 Feb., 1903
YOUNG, JOHN, Jun., c/o Messrs Wallsend Shipway and Engineering Co., Ltd., Wallsend-on-Tyne,	23 Nov., 1897
YOUNGER, JOHN, Birch Bank, 88 Albert road, Crosshill, Glasgow,	3 Mar., 1903

INDEX.

Abstract of "House Expenditure" Account, - - - - - 372
Address, Presidential, - - - - - - - - - - - 1
Administration in Workshops, - - - - - - - - - 254
"Ados" CO_2 Recorder, - - - - - - - - - - 135
Advantages of Membership in Scientific Institution, - - - - - 3
Aitchison, William, Memoir of, - - - - - - - - - 383
Anderston Quay, - - - - - - - - - - - - 311
Angular Acceleration, - - - - - - - - - - - 183
Anniversary Dinner, "James Watt," - - - - - - - 333
Annual Report of the Council, - - - - - - - - - 361
Annual Subscription, - - - - - - - - - - - 382
Arrol, Thomas Arthur, Memoir of, - - - - - - - - 383
Articles of Association, - - - - - - - - xi., 343, 344
Articles of Asociation, Confirmation of, - - - - - - 344
Associate Members, List of, - - - - - - - - - 436
Associates, Deceased, - - - - - - - - - - - 399
Associates, List of, - - - - - - - - - - - 439
Auxiliary Equipment, - - - - - - - - - - - 256
Award of Books, - - - - - - - - - - - - 346

Balance Sheet, - - - - - - - - - - - - - 370
Bearing Piles, - - - - - - - - - - - - - 317
Better Shops, - - - - - - - - - - - - - 263
Board of Governors of Glasgow and West of Scotland Technical College, 365
Board of Governors of Glasgow School of Art, - - - - - - 365
Board of Trade Consultative Committee, - - - - - - - 362
Books Added to Library by Purchase, - - - - - - - 375
Brake, Prony, - - - - - - - - - - - - - 279
Broomielaw "Key," - - - - - - - - - - - - 306
Bryce, John, Memoir of, - - - - - - - - - - 399
Bye-Laws, - - - - - - - - - - - - - - xxix.
Bye-Laws, Confirmation of, - - - - - - - - - - 350

Calorimeter Wiredrawing, - - - - - - - - - - - 200
Cassells, Robert Dunlop, Memoir of, - - - - - - - - 400
Circulation in Shell Boilers—by Mr. WILLIAM THOMSON, - - - 131
Difficulty of Producing Complete Combustion, - - - - 133
Orsat Apparatus, - - - - - - - - - - 134, 144
Flue Gases, - - - - - - - - - - - - - 136
Makin's Cones, - - - - - - - - - - - - 137
Transmission of Heat, - - - - - - - - - - - 139

Fitting Makin's Cones, - - - - - - - - - - 142
Discussion, - - - - - - - - - - - 146
Clark, George A., Memoir of, - - - - - - - - - 384
Clyde Place Quay, - - - - - - - - - - - 311
Conditions Governing Variable Speed Motors, - - - - - - 217
Confirmation of Bye-Laws, - - - - - - - - - - 350
Conflict of Opinion Regarding Bearing Piles, - - - - - 317
Consideration of Different Kinds of Connecting-Rods, - - - 177
Contents, - - - - - - - - - - - - - - v.
Copy of Original Contract for Cunard Steamers, - - - - - 328
Correspondence—
Mr. William Alexander—Results of Tests with a Pelton Wheel, 298.—Mr. Konrad Anderson—Steam Turbines, 56.—Mr. James Andrews—The de Laval Steam Turbines, the Wiredrawing Calorimeter, and the Superheating of Steam, 209.—Mr. E. Hall-Brown—Steam Turbines, 40.—Mr. Charles Fowling—Riveted Attachments in Ships, 108.—Mr. W. Geipel—Speed Control of Electric Motors, 241.—Dr. J. B. Henderson—Results of Tests with a Pelton Wheel, 300.—Mr. Wm. Campbell Houston—Results of Tests with a Pelton Wheel, 303.—Mr. B. J. Ives—Riveted Attachments in Ships, 110.—Professor Jamieson—Steam Turbines, 42.—Mr. J. Foster King—Riveted Attachments in Ships, 115.—Mr. Henry Lea—Speed Control of Electric Motors, 239.—Mr. John M'Kenzie—Riveted Attachments in Ships, 112.—Mr. C. A. Matthey—Steam Turbines, 40; Circulation in Shell Boilers, 163; Dynamic Balance of the Connecting-Rod, 192; Results of Tests with a Pelton Wheel, 293.—Mr. R. H. Neilson—The de Laval Steam Turbine, the Wiredrawing Calorimeter, and the Superheating of Steam, 209.—Mr. H. F. L. Orcutt—Tools and Gauges in the Modern Shop, 272.—Mr. F. J. Rowan—Riveted Attachments in Ships, 113; Circulation in Shell Boilers, 159.—Mr. W. B. Sayers—Speed Control of Electric Motors, 246.—Mr. S. J. P. Thearle—Riveted Attachments in Ships, 106.
Council Report, - - - - - - - - - - - - 361
Critical Speed of a Turbine Wheel - - - - - - - - 18
Custom House Quay, - - - - - - - - - - - 316

Davison, Thomas, Memoir of, - - - - - - - - - 384
Deceased Members, - - - - - - - - - - - 383
Defect from True Balance in an Engine, - - - - - - - 182
De Laval Turbine, - - - - - - - - - - - 10
Dempster, John, Memoir of, - - - - - - - - - 385
Difficulty of Producing Complete Combustion, - - - - - 133

Discussion on Papers—
Remarks by Mr. W. M. Alston—Old Quay Walls of Glasgow Harbour, 322, 326.—Mr. Konrad Anderson—Steam Turbines, 46.—Mr. H. W. Andrews—Circulation in Shell Boilers, 158.—Prof. A. Barr—Dynamic Balance of the Connecting-Rod, 191; The de Laval Steam Turbine, the Wiredrawing Calorimeter, and the Superheating of Steam, 204.—Mr. John Barr—Steam Turbines, 39; Results of Tests with a Pelton Wheel, 288; Old Quay Walls of Glasgow Harbour 323.—Mr. A S Biggart—Riveted Attachments in Ships, 91; Old Quay Walls of Glasgow Harbour, 324.—Prof. J. H. Biles—Riveted Attachments in Ships, 81, 103.—Mr. E. Hall-Brown—Steam Turbines, 36; Circulation in Shell Boilers, 150, 153; Dynamic Balance of the Connecting-Rod, 189; Tools and Gauges in the Modern Shop, 267.—Dr. J. Bruhn—Riveted Attachments in Ships, 115.—Mr. W. A. Chamen—Steam Turbines, 38; Speed Control of Electric Motors, 235.—Mr. Alexander Cleghorn—Steam Turbines, 38; Dynamic Balance of the Connecting-Rod, 191; The de Laval Steam Turbine, the Wiredrawing Calorimeter, and the Superheating of Steam, 208.—Mr. Allan Coats Jun.—Results of Tests with a Pelton Wheel, 287.—Mr. Sinclair Couper—Circulation in Shell Boilers, 146.—Mr. Archibald Denny—Steam Turbines, 39; Riveted Attachments in Ships, 91, 105, 106, 124, 129; Dynamic Balance of the Connecting-Rod, 191; The de Laval Steam Turbine, the Wiredrawing Calorimeter, and the Superheating of Steam, 215.—Mr. A. Marshall Downie—Tools and Gauges in the Modern Shop, 269.—Mr. William Foulis—Steam Turbines, 32, 33, 39, 40; Riveted Attachments in Ships, 94, 129; Tools and Gauges in the Modern Shop, 272; Results of Tests with a Pelton Wheel, 293; Old Quay Walls of Glasgow Harbour, 327.—Mr. Robert Haig—Steam Turbines, 39.—Mr. Henry Hand—Riveted Attachments in Ships, 94.—Mr. C. P. Hogg—Old Quay Walls of Glasgow Harbour, 323.—Mr. Wm. Campbell Houston—Results of Tests with a Pelton Wheel, 286, 291.—Mr. J. R. Jack—Riveted Attachments in Ships, 88.—Prof. Jamieson—Circulation in Shell Boilers, 156.—Mr. J. Foster King—Riveted Attachments in Ships, 82.—Prof. Magnus M'Lean—Speed Control of Electric Motors, 233.—Mr. W. M'Whirter—Steam Turbines, 38.—Mr. Henry A. Mavor—Steam Turbines, 33; Speed Control of Electric Motors, 231.—Mr. James Mollison—Circulation in Shell Boilers, 159, 175.—Mr. Angus Murray—Tools and Gauges in the Modern Shop, 270; Results of Tests with a Pelton Wheel, 290, 292.—Mr. T.

Blackwood Murray—Speed Control of Electric Motors, 234.—Mr. Robert T. Napier—Riveted Attachments in Ships, 87; Circulation in Shell Boilers, 153.—Mr. Matthew Paul—Tools and Gauges in the Modern Shop, 264.—Mr. John Reid—Riveted Attachments in Ships, 95; Circulation in Shell Boilers, 154.—Mr. James Rowan—Tools and Gauges in the Modern Shop, 265.—Mr. W. B. Sayers—Speed Control of Electric Motors, 243.—Mr. John Sime—Steam Turbines, 37; Circulation in Shell Boilers, 152.—Mr. Wilfrid L. Spence—Speed Control of Electric Motors, 236, 246.—Mr. Benson Taylor—Riveted Attachments in Ships, 99.—Mr. William Thomson—Circulation in Shell Boilers, 166.—Mr. James Waddell—Old Quay Walls of Glasgow Harbour, 323.—Mr. John Ward—Riveted Attachments in Ships, 87.—Prof. W. H. Watkinson—Circulation in Shell Boilers, 155; The de Laval Steam Turbine, the Wiredrawing Calorimeter, and the Superheating of Steam, 211.—Mr. William J. Wilson—Circulation in Shell Boilers, 156.—Mr. A Scott Younger—Riveted Attachments in Ships, 102.

Donations to the Library, - - - - - - - - - - 373
Dübs, Charles R., Memoir of, - - - - - - - - - 386

Effect of Form of Nozzle on Form of Jet, - - - - - - 195
Effect of Given Speed Range in Size of Motor,- - - - - 222
Effect of Speed Variation of Motor in Efficiency, - - - - 225
Election of Office-Bearers, - - - - - - - - - 345, 358
Engineering Standards Committee, - - - - - - - - - 364
Entropy-Temperature Diagram, - - - - - - - - - 197
Experimental and Analytical Results of a Series of Tests with a Pelton Wheel—by Mr. Wm. Campbell Houston, B.Sc. - 275
Efficiency of Pelton Wheel, - - - - - - - - - - 276
Prony Brake, - - - - - - - - - - - - 279
Power Absorbed in Friction and Air Resistance, - - - 281
Loss Due to Splitting Action of Cups, - - - - - - - 282
Loss Due to Cups Cutting Water Jet, - - - - - - - 283
Discussion, - - - - - - - - - - - - - 286
Extension of Glasgow Quayage, - - - - - - - - - 307

Failure of Quay Walls, - - - - - - - - - - 321
Ferguson, Daniel, Memoir of, - - - - - - - - - 386
Finnieston Quay, - - - - - - - - - - - 314
Fixing Limits of Accuracy, - - - - - - - - - - 257
Flue Gases, - - - - - - - - - - - - 136
Formula for Stress on Edge Riveting, - - - - - - - - 67
Foulis, William, Memoir of, - - - - - - - - - 386

Frame Rivets, Stress on, - - - - - - - - - - 72

Graduates, Deceased, - - - - - - - - - - - 400

Hastie, William, Memoir of, - - - - - - - - - 388
Heat, Transmission of, - - - - - - - - - - 139
Hill, Thomas, Memoir of, - - - - - - - - - - 389
Hodgart, John, Memoir of, - - - - - - - - - 389
Holmes, Matthew, Memoir of, - - - - - - - - - 390
Honorary Members, List of, - - - - - - - - - 402
Honorary Treasurer, - - - - - - - - - - - 346
"House Expenditure" Account, - - - - - - - - - 372
Hutson, Guybon, Memoir of, - - - - - - - - - 391
Hydepark Quay, - - - - - - - - - - - - 313

Improved Facilities for Storing and Distributing Tools, - - - 260
Increase of Accommodation for Institution, - - - - - - 6
Increased Use of Accurate Gauges, - - - - - - - - 258
Index, - - - - - - - - - - - - - - - 453
Inspection System, - - - - - - - - - - - 261

"James Watt" Anniversary Dinner, - - - - - - - 333

Lancefield Quay, - - - - - - - - - - - - 314
Libraries, etc., which receive the Institution Transactions, - - 379
Library, Books Added to, by Purchase, - - - - - - - 375
Library Committee, Report of, - - - - - - - - - 373
Library, Donations to, - - - - - - - - - - 373
Library, Periodicals Received at, - - - - - - - - 380
Library, Recommendation Book, - - - - - - - - 381
Limits of Speed Range in Motors, - - - - - - - - 220
List of Members, - - - - - - - - - - - - 402
Lloyds' Technical Committee, - - - - - - - - - 363

M'Master, Robert, Memoir of, - - - - - - - - - 392
M'Vitae, Andrew, Memoir of, - - - - - - - - - 401

Makin's Cones, - - - - - - - - - - - - 137
Makin's Cones, Fitting of, - - - - - - - - - - 142
Mavisbank Quay, - - - - - - - - - - - 318
Members, Associate, List of, - - - - - - - - - 436
Members, Deceased, - - - - - - - - - - - 383
Members, Honorary, - - - - - - - - - - - 402
Members, List of, - - - - - - - - - - - 402
Memorandum of Association, - - - - - - - - - ix.
Mechanical Speed Gear, - - - - - - - - - - 230

Method Adopted to Determine the Stresses in Rivet Attachments, - 63
Minutes of Proceedings, - - - - - - - - - - 343
Multiple Voltage System, - - - - - - - - - - 230

New Books Added to Library, - - - - - - - 373, 375
Notes Relative to the de Laval Steam Turbine, the Wiredrawing Calorimeter, and the Superheating of Steam by Wiredrawing—by Professor W. H. WATKINSON, - - - - - - 194
Effect of Form of Nozzle on Form of Jet, - - - - - - 195
Entropy-Temperature Diagrams, - - - - - - - - 197
Wiredrawing Calorimeter, - - - - - - - - - 200
Steam Superheated by Wiredrawing, - - - - - - - 202
Discussion, - - - - - - - - - - - - - 204

Obituary, - - - - - - - - - - - - - - 383
Office-Bearers, Election of, - - - - - - - - - 345, 358
Organisation and Administration in Workshops, - - - - 254
Orsat Apparatus, - - - - - - - - - - 134, 144

Parson's Turbine, - - - - - - - - - - - 9
Paul, Andrew, Memoir of, - - - - - - - - - - 392
Pelton Wheel, Efficiency of, - - - - - - - - - 276
Pelton Wheel, Loss Due to Cups Cutting Water Jet, - - - 283
Pelton Wheel, Loss Due to Splitting Action of Cups, - - - 282
Pelton Wheel, Power Absorbed in Friction, etc., - - - - 281
Periodicals Received at Library, - - - - - - - - 380
Peripheral Speed of Turbine Wheel, - - - - - - - - 15
Philp, William Taylor, Memoir of, - - - - - - - - 393
Premiums of Books, - - - - - - - - - - vii., 357
Presidential Address, - - - - - - - - - - - 1
New Articles of Association, - - - - - - - - 2
Advantages of Membership in Scientific Institutions, - - 3
Increase of Accommodation for the Institution, - - - - 6
Presidents of the Institution, - - - - - - - - - iv.
Proceedings, Minutes of, - - - - - - - - - - 343
Prony Brake, - - - - - - - - - - - - 279
Properties of a Steam Nozzle, - - - - - - - - - 13

Quay Walls, Failure of, - - - - - - - - - - 321

Rateau's Turbine, - - - - - - - - - - - 31
Register Book for Students, - - - - - - - - - 382
Report of the Council, - - - - - - - - - - 361
Report of the Library Committee, - - - - - - - - 373
Rewarding Labour, - - - - - - - - - - - 262
Ritchie, James, Memoir of, - - - - - - - - - 399

Rivets, Size of, - - - - - - - - - - - - - 60

Seath, Thomas B., Memoir of, - - - - - - - - - - 394
Simons, William, Memoir of, - - - - - - - - - - 396
Societies Exchanging Transactions with the Institution, - - - 377
Some Points in Connection with the Riveted Attachments in Ships—
by Mr. J. BRUHN, D.Sc., - - - - - - - - - - 58
Size of Rivets, - - - - - - - - - - - - - 60
Method Adopted to Determine the Stresses in Rivet Attachments, 63
Stresses in Edge Riveting of Outside Plating, - - - 67, 73, 80
Stress on Frame Rivets, - - - - - - - - - - 72
Position of Maximum Stresses in Edge Attachments, - - - 77
Discussion, - - - - - - - - - - - - - - 81
Speed Control of Electric Motors when Driven from Constant-Pressure Mains—by Mr. W. B. SAYERS, - - - - - - - 216
Conditions and Limitations Governing Variable Speed Motors, - 217
Ward-Leonard's System of Motor Control, - - - - - - 218
Limits of Speed Range, - - - - - - - - - - 220
Effect of a Given Speed Range on Size of Motor, - - - - 222
Effect of Speed Variation on Efficiency, - - - - - - 225
Mechanical Speed Gear Combined with Variable Speed Electric Motor, - - - - - - - - - - - - - - 230
Multiple Voltage System, - - - - - - - - - - 230
Discussion, - - - - - - - - - - - - - - 231
Springfield Quay, - - - - - - - - - - - 315, 318
Standardising Sizes, - - - - - - - - - - - - 259
Steam Jacketed de Laval Nozzle, - - - - - - - - - 203
Steam, Superheated by Wiredrawing, - - - - - - - - - 202
Steam Turbines: With Special Reference to the de Laval type of Turbine—by Mr. KONRAD ANDERSON, - - - - - - - 8
Parson's Turbine, - - - - - - - - - - - 9
De Laval Turbine, - - - - - - - - - - - 10
Properties of a Steam Nozzle, - - - - - - - - - 13
Peripheral Speed of Turbine Wheel, - - - - - - - 15
Superheated Steam, - - - - - - - - - - - 25
Rateau's Turbine, - - - - - - - - - - - 31
Discussion, - - - - - - - - - - - - - - 33
Stresses in a Turbine Wheel, - - - - - - - - - - 17

The Dynamic Balance of the Connecting-Rod—by Mr. C. M. MATTHEY, 176
Consideration of Different Kinds of Rods, - - - - - - 177
Defect from True Balance, - - - - - - - - - - 182
Angular Acceleration, - - - - - - - - - - - 183
Unbalanced Couple in an Engine, - - - - - - - - 184

Discussion, - - - - - - - - - - - - - 189
The Old Quay Walls of Glasgow Harbour—by Mr. W. M. Alston, - 305
Broomielaw "Key," - - - - - - - - - - - 306
Extension of Quayage under first and second periods of Improvement, - - - - - - - - - - - - 307
Third period of Improvement, - - - - - - - - 310
Fourth period of Improvement, - - - - - - - - 313
Conflict of Opinion *re* Use of Bearing Piles, - - - - - 317
Failure of Quay Walls, - - - - - - - - - - 321
Discussion, - - - - - - - - - - - - 322
Thomson, James M., Memoir of, - - - - - - - - - 397
Tools and Gauges in the Modern Shop—by Mr. H. F. L. Orcutt, - 248
General Organisation and Administration, - - - - - - 254
Training of Men, - - - - - - - - - - - 255
Auxiliary Equipment, - - - - - - - - - - 256
Fixing Limits of Accuracy, - - - - - - - - - 257
Increased Use of Accurate Gauges, - - - - - - - 258
Standardising Sizes, - - - - - - - - - - - 259
Improved Facilities for Storing and Distributing Tools, - - 260
Inspection System, - - - - - - - - - - - 261
Rewarding Labour, - - - - - - - - - - - 262
Better Shops, - - - - - - - - - - - - 263
Discussion, - - - - - - - - - - - - - 264
Transmission of Heat, - - - - - - - - - - - - 139
Treasurer's Statement, - - - - - - - - - - - 368
Turbine Dynamo, - - - - - - - - - - - - 21
Turbine Fan, - - - - - - - - - - - - - 21
Turbine Motor, - - - - - - - - - - - - - 21
Turbine Pump, - - - - - - - - - - - - - 21
Turnbull, John, Jun., Memoir of, - - - - - - - - - 397

Unbalanced Couple in an Engine, - - - - - - - - - 184
Use of Bearing Piles, - - - - - - - - - - 315, 317

Vote of Thanks to President, - - - - - - - - - - 7

Wallace, Hugh, Memoir of, - - - - - - - - - - 400
Ward-Leonard System of Motor Control, - - - - - - - 218
Windmillcroft Quay, - - - - - - - - - - - 312
Wiredrawing Calorimeter, - - - - - - - - - - 200
Woodburn, James Cowan, Memoir of, - - - - - - 398

Fig. 6.

ECTIONS OF A STEAM TURBINE.

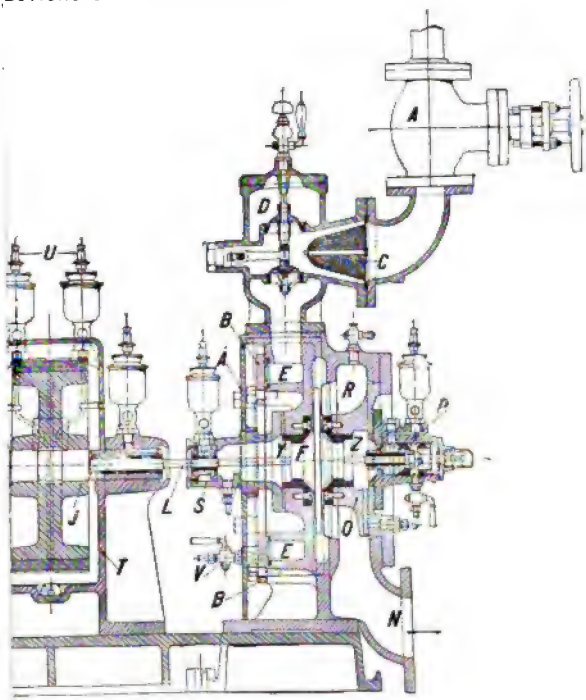

LONGITUDINAL.

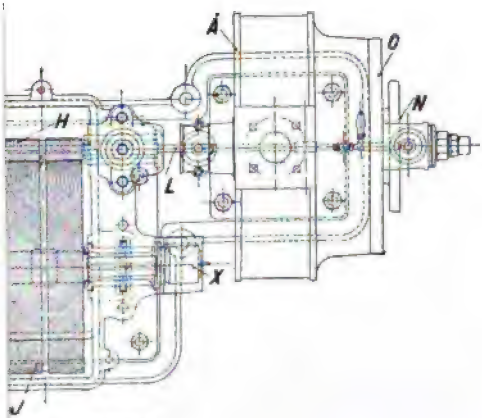

TRANSVERSE.
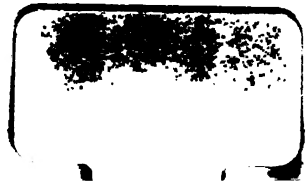
LEGGAT BROS.
ENGINEERING LITHOGRAPHERS. GLASGOW.